TEKTRONIX®

577-178-D1

LINEAR IC CURVE TRACER

INSTRUCTION MANUAL

577-178-D1 TEKTRONIX INC

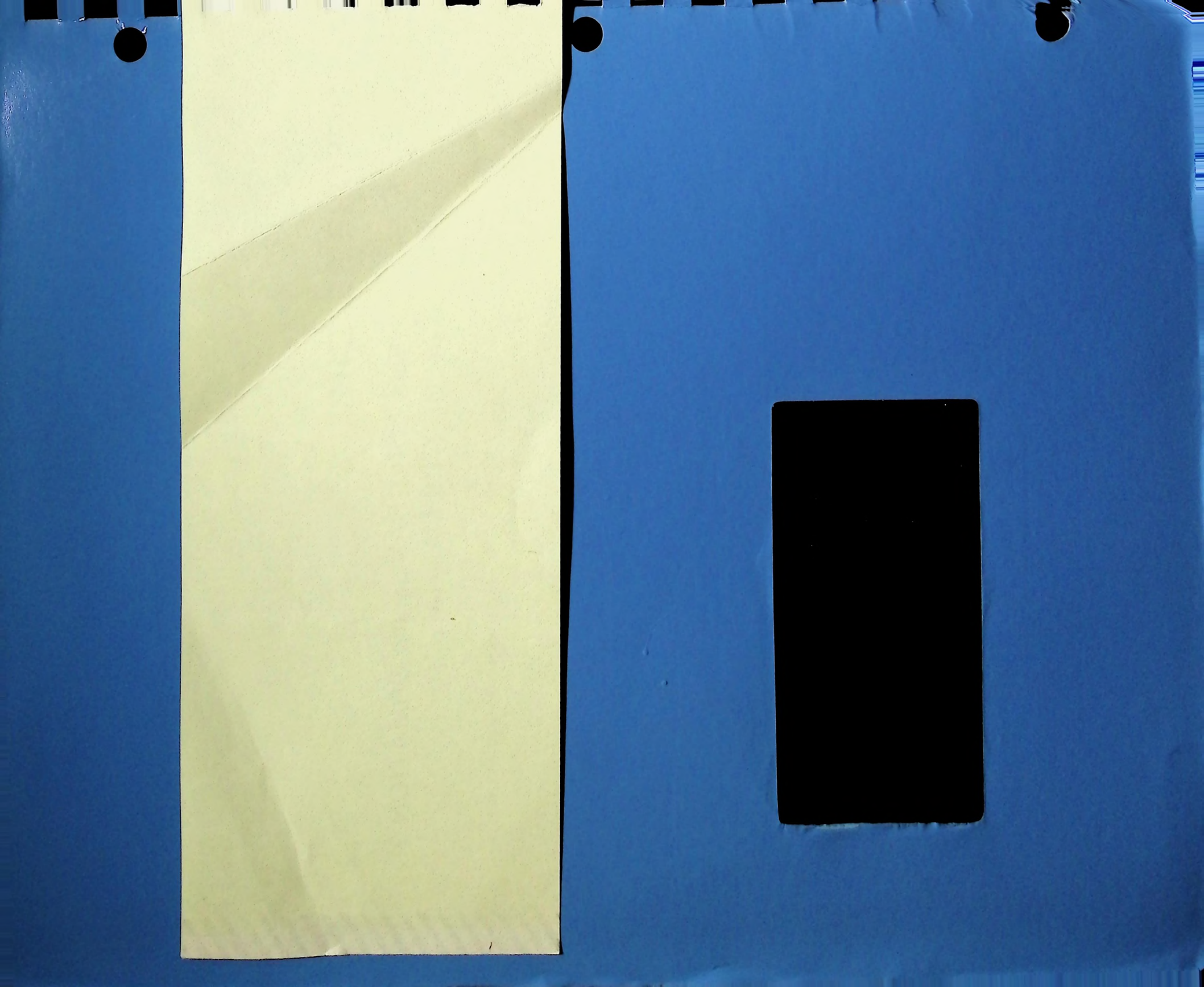

TEKTRONIX®

577-178-D1

LINEAR IC CURVE TRACER

INSTRUCTION MANUAL

Tektronix, Inc.
P.O. Box 500
Beaverton, Oregon 97005

Serial Number _____

070-1474-00

WARRANTY

All TEKTRONIX instruments are warranted against defective materials and workmanship for one year. Any questions with respect to the warranty should be taken up with your TEKTRONIX Field Engineer or representative.

All requests for repair and replacement parts should be directed to the TEKTRONIX Field Office or representative in your area. This will assure you the fastest possible service. Please include the instrument Type Number or Part Number and Serial Number with all requests for parts or service.

Specifications and price change privileges reserved.

Copyright © 1973 by Tektronix, Inc., Beaverton, Oregon. Printed in the United States of America. All rights reserved. Contents of this publication may not be reproduced in any form without permission of Tektronix, Inc.

U.S.A. and Foreign TEKTRONIX products covered by U.S. and foreign patents and/or patents pending.

TEKTRONIX is a registered trademark of Tektronix, Inc.

TABLE OF CONTENTS

	Page
SPECIFICATION	
Introduction	1-1
CHARACTERISTICS—ELECTRICAL	
Vertical Deflection Factors	1-3
Collector Supply	1-3
Positive and Negative Supplies	1-4
Sweep Generator	1-4
Source Resistance	1-4
Load Resistance	1-4
Function Switch	1-5
Display Zero	1-6
Collector Supply	1-6
Step Generator	1-6
Current Mode	1-6
Voltage Mode	1-7
Display Amplifiers	1-7
Indicator and CRT	1-8
Power Input	1-8
ENVIRONMENTAL	
Temperature	1-8
Altitude	1-8
Transportation	1-8
PHYSICAL	
Dimensions	1-9
Weight	1-9
Standard Accessories	1-9
OPERATING INFORMATION	
Introduction to Curve Tracers	2-1
How the 178 Tests Linear IC's	2-2
Operating the Linear IC Curve Tracer	2-8
Function of Controls	
Function Selector—Group 1	2-8
Sweep Generator—Group 2	2-9
Regulated Power Supplies—Group 3	2-9
Collector Supply—Group 4	2-10
Step Generator—Group 5	2-11
Power, Loads, and Source Resistance—Group 6	2-13
Deflection Controls—Group 7	2-14
Display Controls—Group 8	2-15
DEVICE CARDS	
Connecting to the DUT	2-18
Connecting to the 178	2-18
Compensation and other External Networks	2-19
External Feedback Amplifier	2-19
Useful Accessories	2-22

TABLE OF CONTENTS (cont)

	Page
FIRST–TIME OPERATION	
Op–Amp Terminology	2-22
Connecting the Device Under Test (DUT)	2-25
Patching the DUT Card for the 741	2-25
Current Limits	2-26
Initial Setup–Obtaining a Display	2-26
Troubleshooting the Setup	2-28
Measuring Offset Voltage	2-28
Measuring Common–Mode Rejection Ratio	2-32
Measuring Power–Supply Rejection Ratio	2-33
Measuring Input Current	2-34
Measuring Supply Current	2-36
CIRCUIT DESCRIPTION	
Power Supply	3-1
Feedback Amplifier	3-3
Vertical Preamplifier	3-4
Function Switching	3-5
MAINTENANCE	
Introduction	4-1
PREVENTIVE MAINTENANCE	
General	4-1
Cleaning	4-1
Lubrication	4-1
Visual Inspection	4-2
Transistors and Integrated Circuits	4-2
Recalibration	4-2
TROUBLESHOOTING	
Introduction	4-3
Troubleshooting Equipment	4-3
Troubleshooting Aids	4-3
Access to Circuit Boards	4-6
Removing the Vertical Preamp and Feedback Amplifier Boards	4-7
Removing and Replacing the Feedback and Vert Preamp Board from Cam-Switch Assembly	4-12
Removing and Replacing the Cam-Switch Assembly	4-12
Removal of Storage Compartment Shields Preliminary	4-12
Removal–Right Shield	4-15
Removal–Left Shield	4-15
Replacement of Storage Compartment Shield–Left Side	4-15
Replacement of Storage Compartment Shield–Right Side	4-15
PERFORMANCE CHECK/ADJUSTMENT PROCEDURE	
Introduction	5-1
Services Available	5-1

TABLE OF CONTENTS (cont)

Page

PERFORMANCE CHECK/ADJUSTMENT PROCEDURE (cont)
- Test Equipment Required 5-1
- PERFORMANCE CHECK 5-2
- ADJUSTMENT PROCEDURE 5-21

ELECTRICAL PARTS LIST

SCHEMATIC DIAGRAMS & CIRCUIT BOARD ILLUSTRATIONS

MECHANICAL PARTS LIST & ILLUSTRATIONS

APPLICATIONS
- Op Amp Gain Error
- Op Amp Gain at Higher Frequencies
- Measurement Restrictions Due to Insufficient DUT Gain

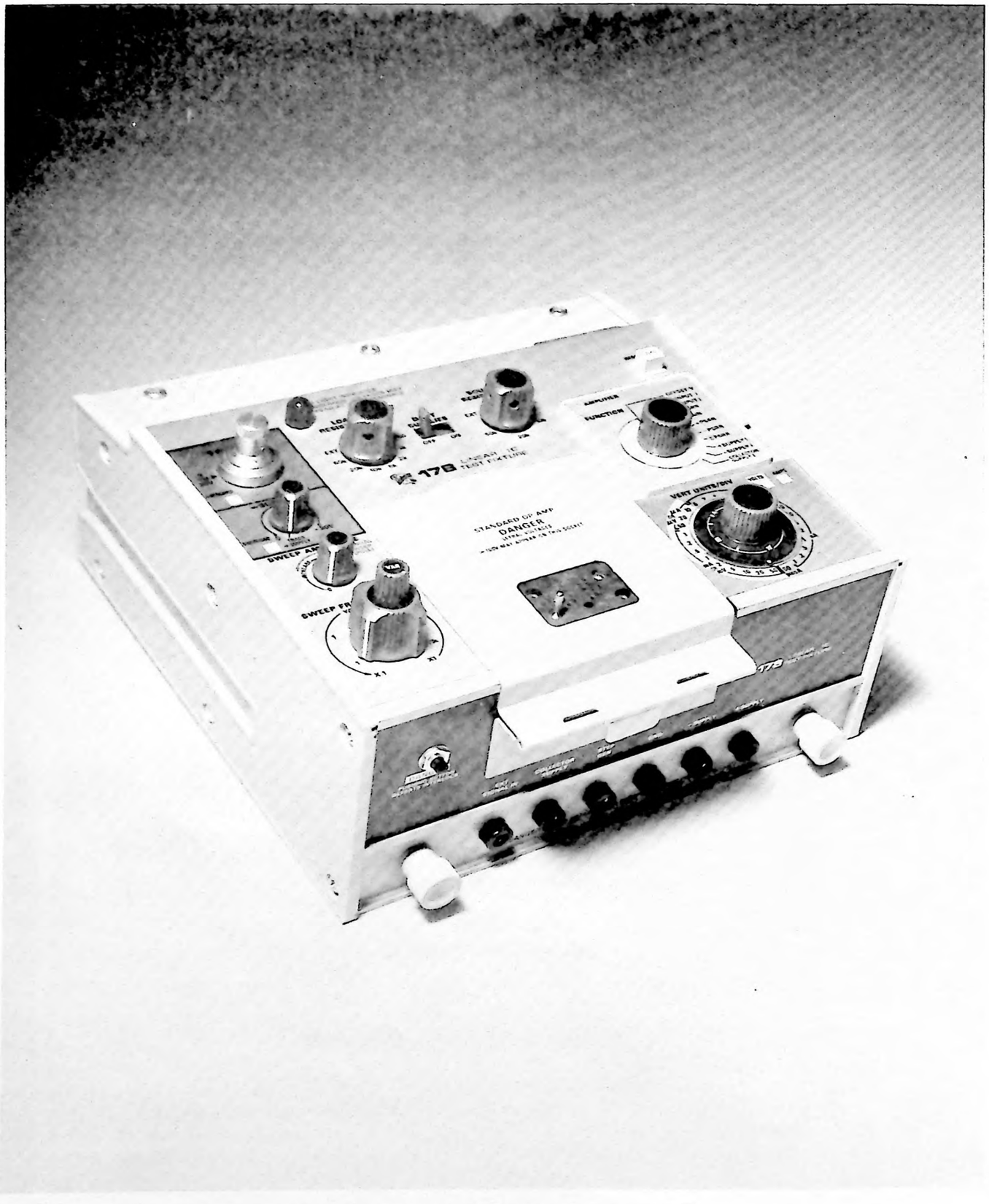

Fig. 1-1. 178 Linear Integrated Circuit Test Fixture.

SPECIFICATION

Introduction

The 178 Linear IC Test Fixture is a plug-in device for use with the 577-D1 or D2 Curve Tracer system. The 577-178 combination, with the D1 Display Unit module, is designed to measure the parameters of operational amplifiers, comparators, differential amplifiers, and regulators.

The D2 Display Unit may be used but the results may not be satisfactory because of the low frequencies necessary to test many devices.

The 178 Linear IC Test Fixture features a sweep generator, positive and negative supplies, part of the vertical measuring system, feedback loop for the Device Under Test (DUT), and switching capabilities to facilitate testing of various parameters under diverse conditions.

The sweep generator provides a sinusoidal output with the frequency variable from 0.0l Hz to 1 kHz. The sweep generator output is used to force the DUT output or the positive or negative supplies (either in phase or out of phase), or to sweep the DUT inputs.

The dc voltage levels of both positive and negative supplies are independently adjustable from 0 to 30 volts. The negative supply can be made to track (have the same absolute amplitude) the positive supply amplitude.

The maximum current capability of the positive and negative supplies can be limited by potentiometers on the DUT card. If the load current attempts to exceed the set limits, the supply current limits and a lamp for each supply indicates the condition.

Any pair, of four pairs, of internal source resistors can be used in series with the amplifier inputs. Any value of external source resistance can be added to the DUT card.

The DUT output can be loaded with one of six values of internal load resistance. Any value of external load resistance can be added to the DUT card.

The vertical measurement system is capable of measuring either voltage or current. The choice of voltage or current measurement is determined by the position of the FUNCTION switch and is indicated by the AMPS or VOLTS lamp.

The vertical deflection factor switch has twenty-eight positions ranging from 50 p/Div to 50 m/Div (unmagnified) in a 1-2-5 sequence.

All of the twenty-eight positions are used for current measurements but only the range from 10 μ/Div to 50 m/Div can be used for voltage measurements.

Any attempt to measure voltage using vertical deflection factors less than 10 μV/Div (unmagnified) causes the VOLTS indicator light to turn off, indicating an unusable switch position.

Vertical deflection factor is increased by a factor of ten when the Vertical POSITION-X10 VERT MAG knob on the 577 is pulled, and is indicated by the lamp behind the VERT UNITS/DIV knob skirt. This lamp also turns off if an unusable switch position is selected.

The FUNCTION selector switch provides eleven test positions. All positions are useful to test operational amplifiers.

Horizontal deflection factors range from 50 mV/DIV to 200 V/DIV (unmagnified) and are selected from the COLLECTOR VOLTS segment of the 577 HORIZ VOLTS/DIV switch.

The Standard Op Amp card can be used to test operational amplifiers (single and dual), comparators, and differential amplifiers.

IC socket-pin configurations are selected by using adapter sockets and patch cords.

An offset ZERO button provides a zero crt-display reference and nulls offset voltage when measuring Δ Input V on the vertical display axis.

Offset is usually reset automatically when the setting of the FUNCTION switch is changed. Offset must be reset manually when switching between 1 and .5 mV/DIV and between .1 mV and 50 μV/DIV.

The stored display on the D1 Display Unit is erased whenever the FUNCTION switch is changed, except between +INPUT I and -INPUT I, +PSRR and -PSRR, and +SUPPLY I and -SUPPLY I.

Regulator cards are used to test IC regulator parameters. These regulator cards are optional accessories and are covered on separate data sheets.

CHARACTERISTICS

ELECTRICAL

Vertical Deflection Factors

Input Current: 50 pA/DIV to .2 mA/DIV in a 1-2-5 sequence, unmagnified. 5 pA/DIV to 20 μA/DIV with 10X magnifier on.

Accuracy[3]: ± 3%, ± 50 pA, unmagnified, ± 4%, ± 50 pA with 10X magnifier on.

Voltage: 10 μV/DIV to 50 mV/DIV in a 1-2-5 sequence, unmagnified. 1 μV/DIV to 5 mV/DIV with 10X magnifier on.

Accuracy[3] (in GAIN and OFFSET V functions): ± 3%, unmagnified. ± 4% with 10X magnifier on.

Accuracy (in CMRR function): $3\% + \frac{100\ K}{Gain - K}\%$ ± $\frac{150}{K}$ $\mu V/V_{cm}$. $4\% + \frac{100\ K}{Gain - K}\%$ ± $\frac{150}{K}$ $\mu V/V_{cm}$, with 10X magnifier on (1 μV/DIV to 5 μV/DIV). See footnotes 1 and 2.

Accuracy (in PSRR functions): $3\% + \frac{100\ K}{Gain - K}\%$. $4\% + \frac{100\ K}{Gain - K}\%$, with 10X magnifier on (1 μV/DIV to 5 μV/DIV) See footnotes 1 and 2.

Power Supply

Current: 1nA/DIV to 50 mA/DIV in a 1-2-5 sequence, unmagnified. .1 nA/DIV to 5 mA/DIV with 10X magnifier on.

Accuracy[3]: 3%, ± 1 nA unmagnified. 4%, ± 1 nA with 10X magnifier on.

Collector Supply

Current: 1 nA/DIV to 50 mA/DIV, in a 1-2-5 sequence, unmagnified. .1 nA/DIV to 5 mA/DIV with 10X magnifier on.

Accuracy[3]: 3%, ± 1 nA, unmagnified. 4%, ± 1 nA with 10X magnifier on.

[1] Gain DUT gain with small signal out near zero volts with 50 kΩ load.
K = 10 for 50 mV/DIV to 1 mV/DIV,
K = 100 for .5 mV/DIV to 100 μV/DIV,
K = 1000 for 50 μV/DIV to 10 μV/DIV, and V_{cm} = Common-mode voltage.

[2] Vertical magnification is not recommended for .5 mV/DIV through 50 mV/DIV unmagnified settings.

[3] Accuracies are the highest percentage of on-screen value.

Positive and Negative Supplies

Voltage: Adjustable from 0 to 30 volts.

Both supplies can be adjusted from +SUPPLY control.

Negative supply can be independently adjusted using an uncalibrated -SUPPLY control.

Accuracy: 2%, ± 100 mV. -Supply voltage, ± 1% from the +SUPPLY, in the TRACK +SUPPLY position.

Current: At least 150 mA. Adjustable current limiting.

Sweep Generator

Frequency: .01 Hz to 1 kHz, sinusoidal signal. Five ranges: .1, 1, 10, 100, and 1 kHz with X.1 to X1 variable. Ranges overlap at X.1 end of variable.

Accuracy: 5% in calibrated (X1) position.

Amplitude: Adjustable, depends on function.

Output Voltage (in OFFSET and GAIN functions): 0 to 30 V, ± 3%, maximum peak. Limited to the output capability of the DUT.

Common-Mode Voltage (in INPUT I and CMRR functions): 0 to 30 V, ± 3%, maximum peak. Limited to the power supply voltages (clipped). In the 1 mV/DIV to 50 mV/DIV ranges, the values are 10% lower.

Power Supply Voltage (in PSRR and SUPPLY I functions): See Positive and Negative Supplies.

Manual: Sweep Generator output may be manually set to any dc level (uncalibrated) within its amplitude range (depends on the setting of the FUNCTION switch).

Source Resistance

Resistances: Four pairs, 50 Ω, 10 k, 20 k, and 50 k. When the VERT UNITS/DIV is set to 1 mV/DIV through 50 mV/DIV, the indicated values increase by 500 Ω.

Accuracy: ± 1%, ± 10 Ω.

External resistors may be used.

Load Resistance

Resistances: Seven Resistances, 100 Ω, 1 k, 2 k, 5 k, 10 k, 20 k, and 50 k.

Accuracy: 3%, except when using the 50 mV, 20 mV, and 10 mV positions of the VERT UNITS/DIV switch. The tolerance may then be as large as 50 kΩ, ± 30%; 20 k, ± 14%; 10 k, ± 7% and 5 k, ± 3.5%, when the DUT output voltage swing is 2.5 V or less. The maximum tolerance decreases exponentially as the output swing is increased and is less than 3% when the output is swinging ± 30 volts.

Function Switch

Selects vertical and horizontal deflection signals and connects the test signal to the DUT.

Table 1-1 shows the FUNCTION switch positions and the measurement displayed on the crt when using the Standard Op Amp card.

TABLE 1-1

Test Number	Functions with Standard Op Amp Card	Vertical Display	Horizontal Display
1	OFFSET V	Input V	Output V
2	+INPUT I	+Input I	Common-mode V
3	-INPUT I	-Input I	Common-mode V
4	CMRR	Δ Input V[4]	Common-mode V
5	GAIN	Δ Input V[4]	Output V
6	+PSRR	Δ Input V[4]	+Supply V
7	-PSRR	Δ Input V[4]	-Supply V
8	± PSRR	Δ Input V[4]	+Supply V[5]
9	+SUPPLY I	+ Supply I	+Supply V
10	-SUPPLY I	-Supply I	-Supply V
11	COLLECTOR SUPPLY I	Collector Supply Current	Collector Supply V[6]

[4] ΔInput V is the change in differential input voltage and does not include dc offset voltage.

[5] The +Supply and -Supply are swept out of phase at the same amplitude in ± PSRR function. Horizontal display is the +Supply voltage.

[6] The Sweep Generator is not used in COLLECTOR SUPPLY I function.

Display Zero

Provides display zero reference.

In functions four through eight, nulls offset voltage to measure Δ Input V on the vertical display axis.

Collector Supply

The 25 V and 100 V ranges of the Collector Supply (577 mainframe) are available to the 178. Supply output available on the 178 front panel and on the DUT (Device Under Test) card. See Table 1-2.

TABLE 1-2

Voltage Ranges	25 V	100 V
Max Peak Current	2.5 A	0.5 A
Peak Current, Pulsed	5 A	1.25 A
Minimum Series Resistance	1.9 Ω	30 Ω
Maximum Series Resistance	120 Ω	2 MΩ

Step Generator

Accuracy (current or voltage steps, including offset):

Incremental: The amplitude of any step is 2% of any other step.

Absolute: Within 3% of STEP/OFFSET AMPL switch setting or 3% of total output, whichever is greater. Within 4% of total output when using 10 steps (in STEP X.1).

Offset Mult Range: Continuously variable from 0 to 10 times, or from 0 to 100 times STEP/OFFSET AMPL switch setting, depending on the STEP X.1 setting, either aiding or opposing the Step Generator polarity.

Current Mode

STEP/OFFSET AMPL Switch Range: 200 mA/Step to 50 mA/Step in a 1-2-5 sequence with STEP X.1 knob pushed in (X1 position). 20 mA/Step to 5 nA/Step with STEP X.1 out.

Maximum Current (steps and aiding offset): 20 times STEP AMPL switch setting, except at least 10 times switch setting when switch is set to 200 mA/Step and 15 times switch setting when switch is set to 100 mA/Step.

Maximum Voltage: At least 7 volts, up to 1 A total output and at least 5 volts, up to 2 A total output.

Maximum Opposing Offset Current: 10 times STEP/OFFSET AMPL switch setting, up to 10 mA. Not more than 20 mA.

Maximum Opposing Voltage: Between 1 volt and 5 volts.

Voltage Mode

STEP/OFFSET AMPL Switch Range: 50 V/Step to 2 V/Step in a 1-2-5 sequence with STEP X.1 button pushed in. 5 mV/Step to 200 mV/Step with STEP X.1 knob out (X.1 position).

Maximum Voltage (Steps and Aiding Offset): 20 times STEP/OFFSET AMPL switch setting.

Maximum Current: At least 100 mA.

Short Circuit Current Limiting: Not more than 200 mA.

Maximum Opposing Offset Voltage: 10 times the STEP/OFFSET AMPL switch setting.

Maximum Opposing Offset Current: Limited between 10 mA and 20 mA at zero volts, going down to zero current at 20 volts, opposing.

Pulsed Steps: Pulsed steps, approximately 300 μs, produced when PULSED 300 μs button is pushed in.

Number of Steps: Ranges from 1 to 10 as selected by the NUMBER OF STEPS control (STEP X.1 button in). Approximately 1 to 95 steps when STEP X.1 button is released (button out).

Display Amplifiers

Display Accuracies (percent of highest on-screen value):

Horizontal Collector Volts: 3%, unmagnified, and 4% magnified.

Horizontal Base Volts: 3%, unmagnified and 4% magnified.

Horizontal Step Generator: 4%, unmagnified and 5% magnified.

Deflection Factors

Horizontal Collector Volts: 50 mV/DIV to 200 V/DIV in a 1-2-5 sequence, unmagnified. 5 mV/DIV to 20 V/DIV, magnified.

Horizontal Base Volts: 50 mV/DIV to 2 V/DIV in a 1-2-5 sequence, unmagnified. 5 mV/DIV to .2 V/DIV magnified.

Indicator and CRT (Display Module)

Cathode Ray Tube

Type: Electrostatic Deflection

Phosphor

D2 (non-storage): P31 (standard)

D1 (storage): Equivalent to P1

Accelerating Voltage: 3.5 kV

Storage Characteristics

Storage Time: 1 hour

Power Input

Line Voltage

Nominal: 100 V, 110 V, 120 V, or 200 V, 220 V, 240 V, within 10%.

Line Frequency

Range: 50 to 60 Hz.

Maximum Power at 110 V, ac, 60 Hz: 155 W (1.7 A).

ENVIRONMENTAL

Temperature

Specified Operating: +10 °C (+50 °F) to +40 °C (+104°F).

Useful Operating: 0°C (+32 °F) to +50 °C (+120 °F).

Non-operating: -40°C (-40 °F) to +65°C (+149°F).

Altitude

Operating: To 10,000 feet.

Transportation

12-inch package drop: Qualified under the National Safe Transit Committe procedure 1A.

PHYSICAL

Dimensions:

Height	4.5 in.	11.4 cm.
Width	7.9 in.	20.1 cm.
Depth	7.8 in.	19.8 cm.

Weight

Net	3.3 lb.	1.5 kg.

Standard Accessories

8-Patch Cords	012-0200-00
1-Dual-in-line 16-pin IC socket	136-0442-00
1-Standard Op Amp Card (with cover)	670-2567-00
1-Interchangeable nomenclature panel	333-1770-00
1- 741 IC Op Amp	156-0067-00
1-577-178-D1 or D2 Instruction Manual	070-1474-00
12-Bifurcated pin terminals	131-1497-00

OPERATING INFORMATION

Introduction to Curve Tracers

For fifteen years Tektronix Curve Tracers have been used to evaluate discrete semiconductor devices. In this time, the use of curve tracers has grown so that today the curve tracer has become a standard in the field of semiconductor measurements. No other instrument can match its range of measurements and versatility.

New generations of curve tracers employ plug-in test fixtures to expand their versatility. The 178 is such a test fixture. It extends curve tracer measurements to include many of the parameters of linear integrated circuits. It is designed to operate in a 577-D1 (storage) curve tracer mainframe, making the Tektronix 577 family the most versatile of curve tracers ever.

Curves Rather than Numbers. Your ability to plot a characteristic curve rather than obtain a single numerical answer to your measurement is one of the curve tracer's truly unique features. A curve is actually a set of answers plotted over a measurement range, which shows you how and why parameters change throughout a device's operating range. The result is more information and insight. Your curve tracer's crt becomes a window on effects that remain hidden from test sets that provide numerical or go-no go answers.

From Lab to Production Line. The versatile curve tracer finds applications that range from the laboratory to the production line. In the laboratory the curve tracer is really the star among other available instruments for evaluating components. Here, because of the wealth of information a curve tracer reveals about the device-under-test, it has no equal.

The production line also finds the curve tracer an indispensable tool to keep things running smoothly. When automated equipment starts to reject large numbers of components, the curve tracer is immediately brought into action to discover what these rejected components 'look like'. Thus the curve tracer pinpoints the problem area. Small batches and special tests are two other production line applications where the curve tracer finds use beside even the most sophisticated automatic system. Often the curve tracer can be used to test an entire batch to a single, special specification in less time that it would take to program the automatic system to include that test.

Incoming inspection groups often sharpen their pencils when comparing curve tracers to automatic test systems as applied to their particular situation. A high-speed, automatic test set usually looks attractive on first analysis, but allowance for typical real-life situations often tips business analysis in favor of curve tracers. Items sometimes overlooked are allowance for equipment down time (both breakdown and routine maintenance and calibration), and allowance for

future testing needs, which are seldom well-defined beforehand. With these two considerations alone, several curve tracers with their higher labor costs often prove to be a wiser investment than a single, high-speed, automatic test set. Why? Equipment failure cannot seriously threaten the capacity of several test stations equipped with rugged curve tracers. Down time on a single station would be a small percentage of total capacity, and even that rare occurence can be avoided at low cost with a spare. As for future capability, few, if any instruments can match the curve tracer's flexibility and measurement range. Added to this, its plug-in versatility permits future expansion to meet the ever-changing requirements of our advancing technology.

How the 178 Tests Linear ICs

Operational amplifiers make up the greatest single class of linear integrated circuits. In order to test amplifiers, the 178 Linear IC Test Fixture uses a closed-loop technique. This technique is a departure from standard curve tracer techniques where device parameters are obtained in open-loop configurations. The essential difference between the two test configurations is seen by comparing two simplified diagrams, figures 1 and 2. In theory, either configuration could be used to determine DUT (device under test) gain A, where $A = \frac{\Delta \text{ output volts}}{\Delta \text{ input volts}}$.

The 178 uses the closed-loop approach because of its greater inherent stability and ease of operation when testing very high-gain devices.

In the closed-loop test of figure 2-1, a test signal is applied between the DUT's input and output. Because of the DUT's gain, its input voltage changes little compared with its output voltage. The small signal at the input is measured while the generator, in effect, applies an easily controllable signal to the DUT's output. Conversely, in the open-loop test of figure 2-2, a small signal applied to the DUT's input produces a less controllable signal that is measured at its output.

Measuring Parameters. Operational amplifier parameters are obtained from the crt display on the Tektronix 577-178 much as parameters of transistors and diodes are obtained with conventional curve tracers. The operator first reads the crt display and then makes any necessary calculations. In the closed-loop test described above, the DUT's small input signal, or dependent variable, is displayed on the Vertical axis of the crt. The large amplitude test signal at the DUT's output, or independent variable, is displayed on the Horizontal axis. Gain is obtained by dividing a change in output voltage (Horizontal) by the corresponding change in input voltage (Vertical).

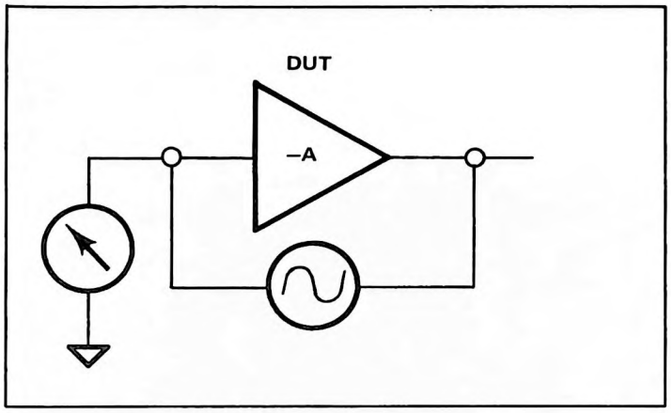

Fig. 2-1. Simplified closed-loop test of an inverting amplifier.

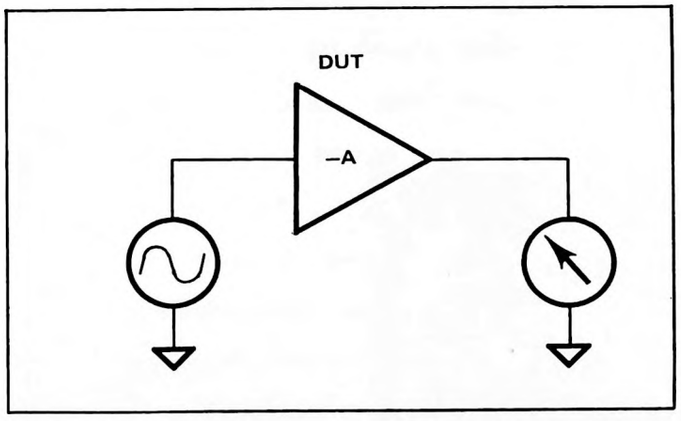

Fig. 2-2. Hypothetical open-loop test of an inverting amplifier.

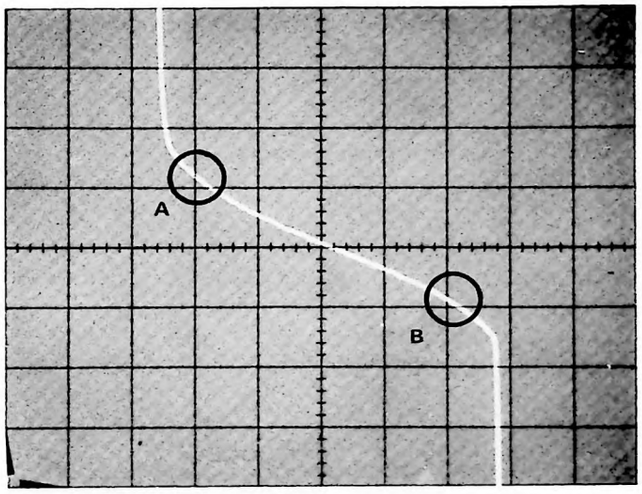

Fig. 2-3. Typical displays of Op Amp characteristics.

Figures 3 through 7

Input voltage vs output voltage, or GAIN curves, for five different operational amplifiers. Vertical deflection factor is 0.1 mV/div, horizontal 5V/div. Load resistance is 50K ohms in Figures 1 and 5, 1K ohm in Figures 2, 3 and 4. Supply voltages are plus and minus fifteen volts.

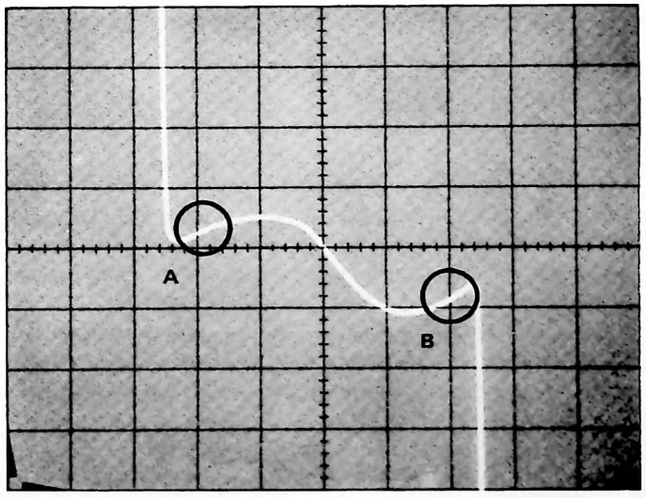

Fig. 2-4. Typical displays of Op Amp characteristics.

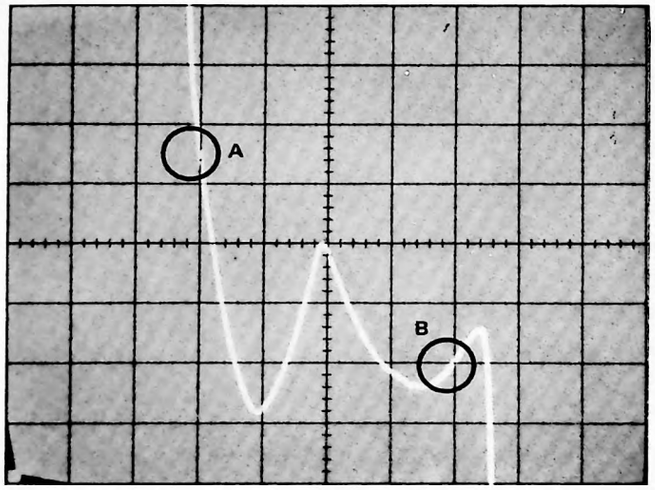

Fig. 2-5. Typical displays of Op Amp characteristics

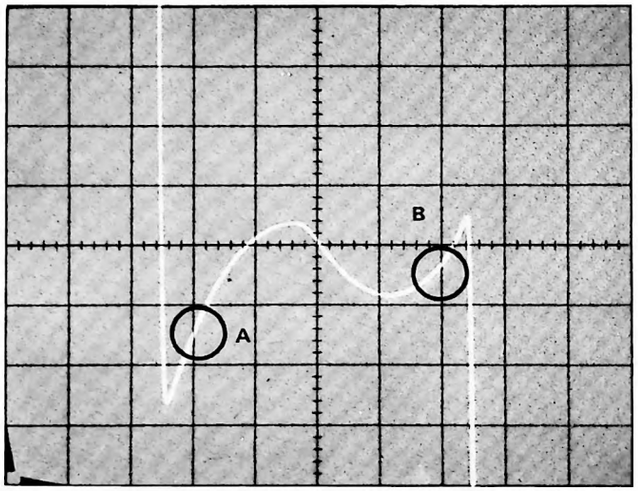

Fig. 2-6. Typical displays of Op Amp characteristics.

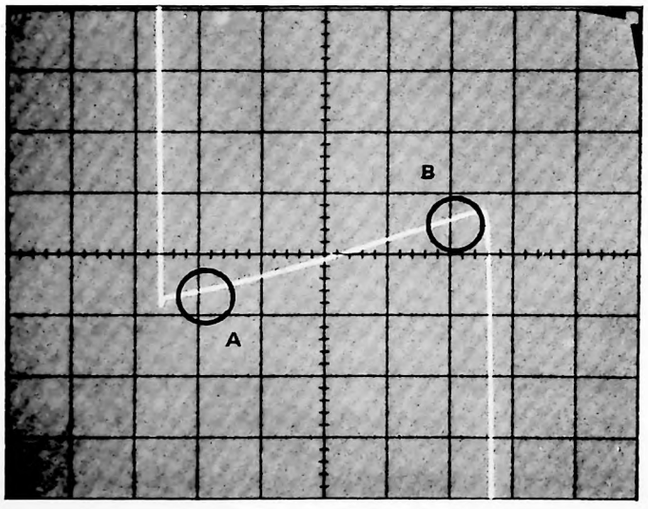

Fig. 2-7. Typical displays of Op Amp characteristics.

Figure 2-3 is such a crt display of an amplifier's gain curve or transfer characteristic measured at essentially dc (actually 0.05 Hz). Zero volts on both axes is at center screen. Considering points A and B, for an output swing from -10 volts to +10 volts, the input voltage is seen to change 200 microvolts. The gain of this amplifier is 100,000 or 100 dB, obtained by dividing output voltage by input voltage.

The vertical deflection is the voltage at the amplifier's inverting input and is therefore positive for negative output voltage. The curve occupies the second and fourth quadrants. The vertical lines going off screen are caused when the output of the operational amplifier (DUT) reaches its limits. At that point the sweep generator's test signal no longer moves the DUT's output, but is applied to the input, causing large, off-screen excursions.

The wealth of Information. The process described above for measuring gain is not as quick as jotting down a number flashed to the operator by a tester's numerical readout. However, it is important to look beyond the test speed and compare the kind of information provided by a Linear IC Curve Tracer and other types of integrated circuit testers.

A tester that provides a numerical answer is likely to measure large signal gain by making two 'point' measurements, for example, from point A and B on figure 2-3. A curve tracer measurement, by contrast, not only shows points A and B, but how the amplifier responds at all points between. It shows how it got from one point to the other.

In figure 2-3, the curve between points A and B contains the information theoretically expected of an ideal amplifier: linear, constant slope with no spurious excursions. It is easy to assume that the expected information, that the input voltage is well behaved, is not important information at all. This misunderstanding can be dispelled by examining four other gain curves.

Figures 2-4 through 2-7 show characteristics that go from point A to point B, but not in the anticipated, ideal manner. These are not unusual amplifiers that were built especially to demonstrate a point, but commonly available integrated circuit amplifiers. The "unusual" response is the ideal curve in figure 2-3. Most devices either do not produce ideal dc transfer characteristics or their application (operating conditions) distorts the characteristics beyond recognition.

Interpreting the Information. Many applications make use of an operational amplifier's extremely high dc gain. Three such uses are transducer amplifiers, voltage regulator amplifiers, and D to A converters. In these applications a high gain is usually relied on to reduce errors and keep the circuit performance dependent mainly upon precise, passive components that make up a feedback network.

One way to evaluate how well an operational amplifier performs in such a dc application is to determine how much its differential input voltage changes during normal operating conditions. To reduce error this change should be small compared to the signal being amplified; just how small depends upon how much is admissible error. Theoretically, an amplifier's gain determines how much its input changes to produce a given change in putput: $V(in) = \frac{V(out)}{Gain}$. In a world of ideal amplifiers, where all curves look like figure 2-3, knowledge of an amplifier's gain is reasonably adequate for intelligent circuit design or component selection. From gain and the required output voltage change, a circuit designer can determine how much error signal will appear at the amplifier's output.

As figures 2-4 through 2-7 show, however, the real world is seldom ideal. These figures demonstrate that a gain parameter may not always be very meaningful or useful, especially at dc or very low frequencies. Here, thermal effects often mask or completely overshadow changes due to actual gain. For some of these figures, it would be difficult indeed to communicate how their respective DUT's perform in terms of a gain parameter. It would even be difficult to say what the gain could be. Whatever the definition, a higher gain amplifier would not necessarily perform better or give less dc error than some other lower gain amplifier.

An Example. Consider figure 2-4. Measuring large-signal gain from points A and B tells nothing about how the input changes between these points. The large signal gain of 106 dB (200,000) suggests that the total input voltage excursions over a ±10 volt operating range is 100 μvolts. However, the 577-178 display clearly shows that the actual excursion is 160 μvolts. More significant may be the voltage excursion for small signals. The gain curve begins to approximate a straight line for small enough signals, making small-signal gain a more meaningful parameter for evaluating amplifier performance in some cases. Consider, for example, a small signal near zero volts output, as in figure 2-4. The input voltage excursion is great for relatively small output voltage changes. The computed dc gain for these small signals is only 50,000, far worse than the large signal gain of 200,000 measured from points A and B. Thus, these examples clearly illustrate the inadequacy of the use of gain for specifying or predicting an amplifier's behavior at or near dc conditions.

Though small-signal gain can be a useful parameter in some applications, it is not a satisfactory substitute for a complete gain curve. For example, finding where the small-signal gain is best or worst would require many measurements over an amplifier's entire range. This information can be determined at a glance from the complete gain curve that is normally traced on the 577-178 crt.

IDENTIFICATION OF CONTROLS

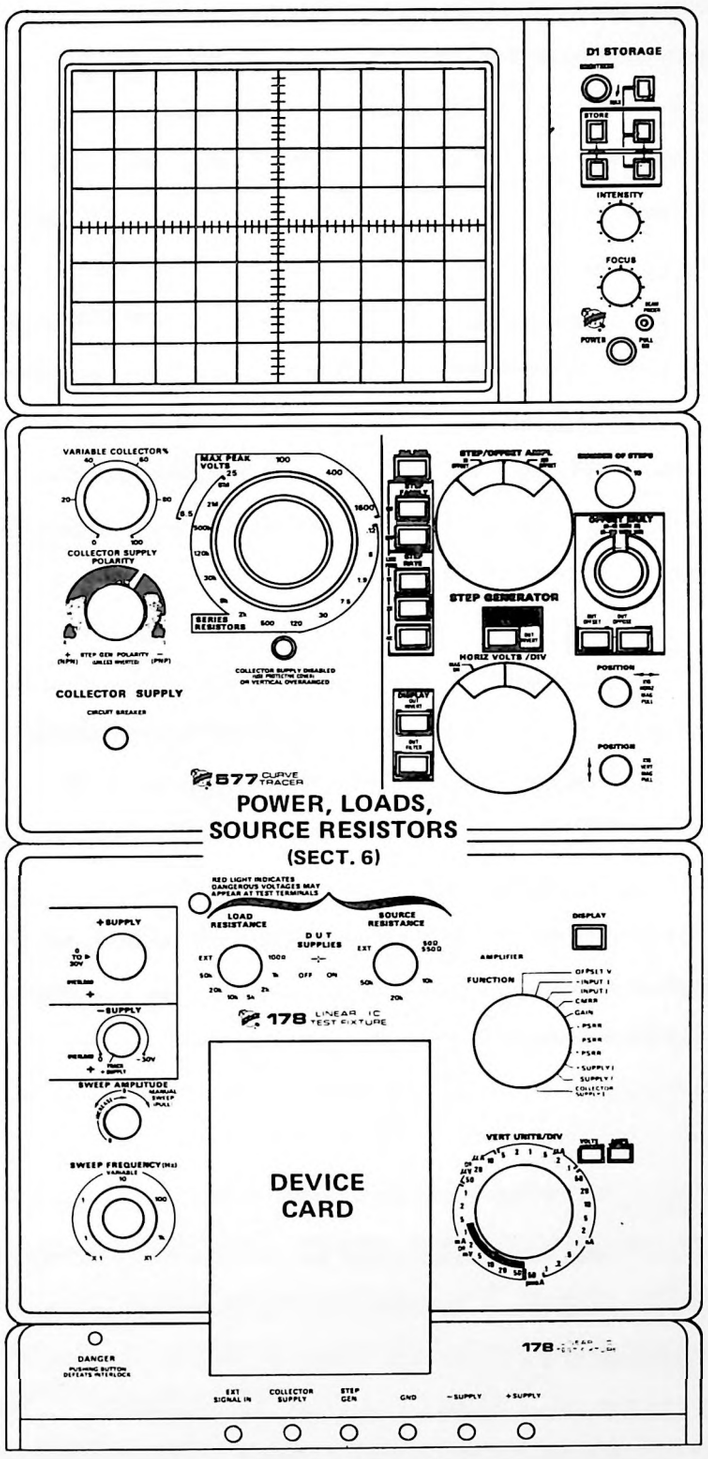

1474-09

Fig. 2-8. 178 Front-panel controls.

Summary. If all amplifiers had ideal response curves there would be little need for a linear IC curve tracer. But actual responses are seldom ideal. Not only gain curves, but curves presenting other parameters, such as Common-Mode Rejection Ratio or Power Supply Rejection Ratio, show non-linearities that are often unspecified. The 577-178 provides a window on this world that has been largely hidden from engineers designing with op amps. Measurements at only a few points give unrealistic indications of an op amp's true behavior. In contrast, curves provide more complete information, much at just a glance.

The 577-178 takes its place in linear IC testing and evaluation. In the tradition of the conventional laboratory curve tracer (such as the 577-177), the linear IC curve tracer is not only a better but a lower cost solution to the many measurement needs. It should be an especially valuable tool to anyone desiring insight into linear IC behavior: the designer using ICs, the device evaluation engineer, the device designer, and the Q.A. engineer. The 178's low cost also makes it attractive for low volume testing in incoming inspection.

Operating the Linear IC Curve Tracer

The 178 Linear IC Test Fixture combines with a Tektronix 577 mainframe and a D1 (storage) or D2 (non-storage) Display Module to form a curve tracer system.

This section of the manual gives a functional description of the front-panel controls and connectors of the 577, D1, and D2, and the 178 Linear IC Test Fixture.

Figure 2-8 is provided for rapid location and identification of controls. Each section of controls is numbered and each section number corresponds to the numbered heading under Function of Controls.

Following the Function of Controls is the First Time Operation.

Function of Controls

Function Selector — Section 1

The eleven-position FUNCTION switch selects the points to be monitored by the vertical and horizontal display axes, and selects the point driven by the Sweep Generator.

The specified operation of the FUNCTION switch depends in part on the Device Card used in the 178. Not all of the eleven positions are used with every device card type. Each device card type uses a separate, interchangeable nomenclature panel that shows the functions of each switch position. A detailed description of the functions of each card is included with card specifications.

Sweep Generator — Section 2

The Sweep Generator provides a sinusoidal waveform to various control points to facilitate plotting the characteristic curves of the Device Under Test (DUT). The control points depend on the Device Card selected and the FUNCTION switch setting.

In many test functions, the Sweep Generator varies the output voltage of the DUT. In others, the input common-mode voltage or the regulated supply voltages (+SUPPLY and -SUPPLY) are varied.

Adjusting the Frequency. The SWEEP FREQUENCY control adjusts the Sweep Generator frequency from .01 Hz to 1 kHz. Five calibrated frequency steps, .1, 1, 10, 100, and 1 kHz, are provided. The VARIABLE control provides continuous adjustment from 0.1 to 1.0 times the selected decade value.

Adjusting the Amplitude. The SWEEP AMPLITUDE control adjusts the Sweep Generator amplitude from zero volts to its maximum value (which depends on the function being swept by the Sweep Generator). Amplifier output voltages and input common-mode voltages can be swept up to ± 30 volts or the limits of the DUT, whichever is the smaller. The regulated Power Supplies can be swept from zero volts to the voltage selected by the Power Supply controls (+SUPPLY and -SUPPLY).

Manual Amplitude Control. To manually control the Sweep Generator output, pull the SWEEP AMPLITUDE control. The output may be set anywhere within the voltage range described under Adjusting the Amplitude. The SWEEP FREQUENCY control is inoperative in this mode.

Regulated Power Supplies — Section 3

There are two adjustable, regulated power supplies, one positive and one negative, in the 178. The adjustment range is 0 to 30 volts, with 150 mA current capability. Adjustable current limiting for each supply is provided on the Device Card. Overload lamps in the supply-control area indicate when the current limit is reached.

Adjusting the Voltage. The supply voltages can be adjusted independently or from a single control. When the -SUPPLY control is in the TRACK + SUPPLY position, the voltage of both supplies is controlled by the +SUPPLY control, a three-turn, calibrated dial. Adjustment accuracy is ±2%, ±100 mV. When the -SUPPLY is not in TRACK + SUPPLY, the -Supply is independently adjustable by the -SUPPLY control.

In some positions of the FUNCTION switch, tests six through ten, the supply voltages are also controlled by the Sweep Generator.

Calibrated Adjustment of the Negative Supply. The -Supply output can be calibrated, independent of the +Supply, by proceeding as follows: Put the -SUPPLY control in TRACK +SUPPLY and adjust the +SUPPLY control to the voltage required for the -Supply. Turn the SWEEP AMPLITUDE control fully counterclockwise. Turn the FUNCTION switch to -SUPPLY I (displays the supply voltage on the horizontal axis). See the section on Deflection Factor Adjustment, Group 7, for more information. Note, exactly, the horizontal position of the spot. Now turn the -SUPPLY control clockwise until the spot returns to the same horizontal position (the supply voltage).

Calibrated Adjustment of Current Limiting. Current limiting for the regulated supplies is located on the device card. Calibrated adjustment can be made in the following manner: Turn to the appropriate SUPPLY I function, either plus or minus, that displays the supply current on the vertical axis (see section on adjusting deflection factors, in Group 7, for more information). Ground the supply that you wish to adjust (use a jumper, either on the Device Card or on the 178 front panel). The vertical display indicates the short-circuit current. Turn the appropriate I Limit on the Device Card to set the required limit. See the section on Device Cards for further details.

Collector Supply — Section 4

The Collector Supply is located in the mainframe. Only two voltage ranges are available to the 178, 25 volts or 100 volts (MAX PEAK VOLTS switch positions).

The Collector Supply is not used for most 178 functions. When not in use set the MAX PEAK VOLTS switch to 25 and COLLECTOR SUPPLY POLARITY to either +DC or -DC.

Safety Interlock. A safely interlock helps to protect the operator from dangerous voltages. A pushbutton (Interlock Defeat) on the 178 front panel must be pressed to enable the Collector Supply when the MAX PEAK VOLTS switch is set to 100.

Waveform and Polarity. The COLLECTOR SUPPLY POLARITY switch selects waveform and polarity of the Collector Supply output. The AC position selects line-frequency alternating voltage. The + or — polarities select full-wave rectified line frequency waveform of the polarity indicated.

The +DC and -DC positions add filtering to the rectified waveform, providing dc voltage. The ripple amplitude on the dc voltage depends (in part) on the load current.

Voltage Adjustment. The VARIABLE COLLECTOR % continuously adjusts the Collector Supply voltage from approximately zero volts to the maximum indicated by the MAX PEAK VOLTS switch.

Power Limiting. The SERIES RESISTORS switch selects the Collector-Supply impedance to limit power to the DUT. The maximum peak power that the DUT can dissipate is read from the scale coupled to the MAX PEAK VOLTS and SERIES RESISTORS switches (pull the MAX PEAK POWER-WATTS knob to unlock from the MAX PEAK VOLTS switch).

Maximum peak power also depends on the setting of the VARIABLE COLLECTOR % control (adjusting the VARIABLE COLLECTOR % to 50% voltage reduces the maximum peak power to 25% of the indicated value).

The actual peak power dissipated by the DUT is usually less than the maximum value indicated by the MAX PEAK POWER-WATTS switch.

DUT power dissipation can reach the maximum value indicated only when the DUT static resistance is equal to the series resistance of the Collector Supply. If the DUT voltage drop is either a small or large percentage of the open circuit voltage of the collector supply, the power dissipated by the DUT is less than the maximum value.

The average DUT power dissipation is usually about one-half of its peak power when the waveform is either ac or full-wave rectified line frequency.

SUPPLY DISABLED Indicator Lamp. The yellow lamp in the Collector Supply area of the 577 front panel indicates when the supply is turned off. Several conditions can turn off the Collector Supply:

a. The 178 DUT SUPPLIES switch is turned off.

b. An unusable Collector Supply voltage range is selected: 6.5, 400, or 1600 volts.

c. The 100 V range is selected, but the Safety Interlock Defeat button (178 front panel) is not pressed.

d. The vertical deflection signal is greatly over-range (approximately 20 divisions of deflection). The over-range mode of operation works only when the 178 is in a current-measuring function: Input Current, Supply Current, or Collector Supply Current.

Step Generator — Section 5

The Step Generator, located in the mainframe, is a regulated voltage or current supply having two main modes of operation. In the Stepping mode, the generator provides discrete steps of voltage or current, synchronized with the Collector Supply.

In the Offset mode the generator provides continously variable dc (voltage or current).

The two modes may be selected independently. When operated together, their outputs are additive.

For most 178 functions, the Step Generator is not used. When not in use, press the STEP FAMILY SINGLE button to turn off the stepping function.

Selecting the Mode of Operation. To Select the stepping mode, press the STEP FAMILY REP button. To select the Offset mode, release the OFFSET ZERO button. Successive pressing of the STEP FAMILY SINGLE button triggers a single set of steps.

Voltage-Current Adjustment. The primary voltage or current adjustment is made by turning the STEP/OFFSET AMPL control. The value indicated by the STEP/OFFSET AMPL control is the amplitude of a single step.

Releasing the STEP X.1 button (concentric with the STEP/OFFSET AMPL control) reduces amplitude by a factor of ten. A corresponding scale factor change takes place and is indicated on the STEP/OFFSET AMPL knob skirt.

The STEP/OFFSET AMPL control, with the OFFSET MULT control (a ten-turn calibrated dial) adjusts the amplitude of the ac voltage or current in the offset mode of operation. The OFFSET MULT control varies the dc amplitude from zero to the equivalent of ten normal steps.

Releasing the STEP X.1 button does not affect the Offset voltage or current. However, since the scale factor of the STEP/OFFSET AMPL control changes with the STEP X.1 button position, the maximum dc amplitude of the OFFSET MULT is read as 100 small steps, rather than 10 normal steps.

Polarity. The polarity of the Step Generator is primarily set by the COLLECTOR SUPPLY POLARITY switch. The steps have the same polarity as the Collector Supply (positive steps when AC position is selected).

The polarity of the dc voltage or current in the Offset mode may be the same or of opposite polarity as the steps (aiding offset).

Releasing the AID button selects the polarity opposite the step (opposing offset).

The Aiding polarity mode of operation has greater current capability than opposing polarity. When using the Offset mode alone, the AID button is normally pressed.

The step polarity selected by the COLLECTOR SUPPLY POLARITY can be inverted. Releasing the STEP/OFFSET POLARITY NORM produces steps that have polarity opposite that of the Collector supply (or negative steps when the AC position is selected).

Number of Steps. Turning the NUMBER OF STEPS control selects from one to ten normal amplitude steps. When the STEP X.1 button is released, the NUMBER OF STEPS control selects up to about 95 small-amplitude steps.

Step Rate. The three STEP RATE buttons select the frequency at which the steps change from one level to the next. The normal rate (press NORM button) is twice the line frequency or one change for each full-wave rectified collector sweep.

The change from one step level to the next occurs at the beginning of each collector sweep when the sweep voltage is zero.

Pressing the SLOW button selects line frequency, and pressing the FAST button selects 4X line frequency. At the fast rate, one half the step changes occur at the peak of the collector-sweep waveform.

Pressing both FAST and SLOW buttons produces the normal rate, but all step changes occur at the peak of the collector sweeps. Selecting Pulsed operation, described later, affects the operation of some of the step rates.

Pulsed Operation. Pushing the PULSED 300 μs button selects Pulsed operation of the stepping mode. The Offset mode of operation is unaffected by this selection.

In Pulsed operation, the steps occur as 300 μs duration pulses. The amplitude level is zero except during the pulse. The pulse amplitude is set by the STEP/OFFSET AMPL switch.

In the Offset mode, the dc level (voltage or current) is constant and the 300 μs pulse is added to the dc.

The Collector Supply goes automatically into dc operation when the Pulsed operation is selected, except for two conditions. First, if the FAST Rate button is pushed, the Collector Supply operates with a sweep waveform. The FAST Rate is not available in Pulsed operation and the actual step rate is the normal rate. Second, if the COLLECTOR SUPPLY POLARITY is in the AC position, the Collector Supply does not go into DC operation when the PULSED 300 μs button is pushed.

Power, Loads, and Source Resistances — Section 6

Disconnecting DUT Power Supplies. The DUT SUPPLIES switch disconnects all DUT power sources (in its OFF position), including the +SUPPLY, the -SUPPLY, the Collector Supply, and the Step Generator.

Adjusting the Source Resistance. The SOURCE RESISTANCE control selects one pair of four input resistors pairs: 50 Ω (550 Ω with VERT UNITS/DIV in the 1 mV to 50 mV/DIV range), 10 k, 20 k, or 50 k.

External resistances may be selected in the EXT position. The external resistors must be mounted on the DUT card and are in series with 50 Ω (550 Ω when VERT UNITS/DIV is in the 1 mV to 50 mV/DIV range), which is the minimum resistance available. All input voltage measurements are made on the source side of the input resistance.

Not all Device Cards use external source resistors. Device card specifications indicate when the SOURCE RESISTANCE switch is inoperative.

Adjusting the Load Resistance. The LOAD RESISTANCE control selects one of seven load resistors: 100 Ω, 1 k, 2 k, 5 k, 10 k, 20 k, or 50 k. External resistance may be selected in the EXT position. The external resistance must be mounted on the DUT card and is always in parallel with 50 kΩ, which is the maximum resistance available.

Not all Device Cards use external resistors. The Device Card specifications indicate whenever the LOAD RESISTANCE switch is inoperative.

Deflection Controls — Section 7

All deflection controls are located on the 577 mainframe except the VERT UNITS/DIV and DISPLAY ZERO, which are located on the 178 Test Fixture.

Positioning. The POSITION controls labeled with a vertical arrow (Vertical POSITION) and a horizontal arrow (Horizontal POSITION) adjust the position of the display on the CRT. If no trace or spot is displayed, the display may be positioned off screen or the intensity may be set too low. See the crt controls Section for use of the BEAM FINDER and INTENSITY controls.

An X10 magnifier is activated on either or both axes by pulling the appropriate POSITION control knob. Magnification changes the deflection factor by ten times.

Adjusting the Vertical Deflection Factor. The VERT UNITS/DIV control on the 178 selects the vertical deflection factor. The deflection factor is either voltage or current per division depending on the FUNCTION switch position. Indicator lamps show either VOLTS or AMPS.

A section of the VERT UNITS/DIV control is devoted to low-current deflection factors only. If this current-only sector is selected when the VOLTS indicator lamp is lighted, the knob skirt lamp automatically turns off.

The voltage measurement range is 10 μV/DIV to 50 mV/DIV (1 μV/DIV with X10 vertical magnifier on). The current measurement range is 50 pA/DIV to 50 mA/DIV (5 pA/DIV with X10 vertical magnifier on).

Not all of the current range is useful on all current measuring positions selectable by the FUNCTION switch. See the functional description for the particular Device Card being used.

When the vertical magnifier is used, the corresponding deflection factor change is indicated on the VERT UNITS/DIV control.

Adjusting the Horizontal Deflection Factor. The HORIZ VOLTS/DIV control (on the 577 mainframe) selects the Horizontal deflection factor. Most measurements require the HORIZ VOLTS/DIV control to be in the COLLECTOR VOLTS segment of its range, unless otherwise stated by the functional description for the Device Card being used.

The voltage measurement range is 50 mV/DIV to 200 V/DIV (from 5 mV/DIV with X10 horizontal magnifier on), although the highest voltage positions are not useful with the 178 Test Fixture.

When the horizontal magnifier is selected, the corresponding deflection factor change is indicated on the HORIZ VOLTS/ DIV control knob skirt.

Inverting the Display. Releasing the upper NORM (DISPLAY INVERT) button inverts the polarity of both vertical and horizontal displays.

Filtering the Vertical Signal. Releasing the lower NORM (DISPLAY FILTER) button adds a low-pass filter to the vertical deflection signal to remove unwanted noise. The pass band of the filter is very low and can add phase shift to the display unless the test frequency approaches dc. Use care when using the filter.

Display Controls — Section 8

The crt controls are located on the D1 or D2 Display Module.

Adjusting the Intensity and Focus Controls. The INTENSITY and FOCUS controls adjust the brightness and spot size (trace width) of the display. Adjust for the best display.

Finding Off-Screen Displays. Press the BEAM FINDER button to provide on-screen display (compresses the display). If no spot or trace is visible, turn the INTENSITY control slowly clockwise while holding the BEAM FINDER button in. The compressed display shows which direction the display is off screen.

Using Storage. Pressing the buttons labeled UPPER and LOWER in the STORE area of the Display Module, selects the Storage mode for the upper and lower halves of the graticule.

Pressing the UPPER and LOWER buttons in the ERASE area selects the half of the graticule to be erased. With both UPPER and LOWER buttons pressed in, the entire screen may be erased.

To erase either the selected half or the entire screen, press the ERASE button.

The brightness of a stored display is controlled by the BRIGHTNESS control. For extended retention of a stored display reduce the brightness to minimum and turn up only for viewing.

For normal operation and retention times, leave the BRIGHTNESS control at MAX.

The BRIGHTNESS control operates only when the VARIABLE COLLECTOR % is turned to zero or the Collector Supply is disabled, as indicated by the yellow lamp.

DEVICE CARDS

A selection of Device Cards provides test configurations most suited to several classes of devices. Device Cards provide a means of making electrical connections to the DUT (device under test), and in most cases, also provide come circuitry.

Many Device Cards include a universal interconnection system that accepts various DUT sockets. A number of sockets are available from Tektronix, Inc. (see the catalog) to connect to common IC case styles, such as the 16—pin or 14—pin dual in-line package or the 8—pin or 10—pin-round package. These and other sockets are also available directly from Amphenol/Barnes.

Most classes of linear IC devices do not have standard pin configurations. For this reason and for greatest flexibility, most Device Cards employ patch cords to connect DUT terminals to the 178.

The operation of the FUNCTION selector on the 178 front panel depends upon the device card used and the description of each card includes operation of the FUNCTION selector.

Interchangeable nomenclature subpanels permit individual labeling of the FUNCTION selector for each Device Card type.

The Standard Operational Amplifier card (670-2567-00) is included with the 178.

Standard Op Amp Card. The Standard Op Amp Card is designed to test devices that require two power supplies (plus and minus), have two (differential) high impedance inputs, and have a single output. Testing other types of devices is treated in the Applications Section of this manual.

The basic measurements that can be made using the Standard Op Amp card are summarized in Table 2—1. A detailed procedure illustrating measurement technique is available in the 'First Time Operation' section.

TABLE 2-1

Function	Vertical Display	Horizontal Display and Sweep Generator Controlling Point
OFFSET V	Differential Input Volts	Output Volts
+INPUT I	+Input Bias Current	Common-Mode Volts
-INPUT I	-Input Bias Current	Common-Mode Volts
CMRR	Δ Differential Input V[1]	Common-Mode Volts
GAIN	Δ Differential Input V[1]	Output Volts
+PSRR	Δ Differential Input V[1]	+Supply Volts
-PSRR	Δ Differential Input V[1]	-Supply Volts
±PSRR	Δ Differential Input V[1]	+Supply Volts and -Supply Volts[2]
+SUPPLY I	+Supply Current	+Supply Volts
-SUPPLY I	-Supply Current	-Supply Volts
COLLECTOR SUPPLY I	Collector Supply Current	Collector Supply Volts

[1] ΔInput V is the relative change in input voltage only. There is no information about the amount of of dc voltage that exits.

[2] The Sweep Generator controls both the +Supply and -Supply. The horizontal display, however, is only the +Supply.

Offset Voltage. Offset voltage is the differential input voltage required to maintain output voltage at zero. The maximum measurable offset voltage using the Standard Op Amp card is 800 mV. However, this large amount of offset voltage is not fully compatible with other measurement functions when ΔInput V is displayed. In these functions the amount of permitted offset voltage depends upon the vertical deflection factor. See Table 2-2.

TABLE 2-2

Vertical Deflection Factor Δ Input V	Maximum Permited Offset Voltage
10 μV to 50 μV/Div	25 mV
100 μV to 500 μV/Div	200 mV
1 mV to 50 mV/Div	2 V

Input I. Input I is the bias current at each of the amplifier input terminals with the amplifier output at zero volts.

Gain. Gain is the change in op amp output voltage divided by the corresponding change in differential input voltage. For an output voltage swing of ±10 volts the measurable range of gain with the Standard Op Amp card is approximately 34 dB (50) to over 126 dB (2 million). Lower gains may be measured at less output voltage change.

CMRR. CMRR (Common-Mode Rejection Ratio) is the change in common-mode voltage divided by the change in differential input voltage while the output voltage is maintained at zero. The measurable range of CMRR is the same as the range for GAIN with the Standard Op Amp card.

PSRR. PSRR (Power Supply Rejection Ratio) is the change in power supply voltage divided by the change in differential input voltage while the output is maintained at zero. For a power supply swing of 5 volts, the measurable range of PSRR with the Standard Op Amp card is approximately 22 dB (12.5) to over 114 dB (500,000).

Supply I. Supply I is the supply current that the DUT draws with its output at zero volts.

Collector Supply I. Collector Supply I is an auxilliary test function. The Collector Supply is not utilized for most op amp measurements.

Connecting To The DUT

The small sockets in the DUT connection area are labeled from 1 through 16. These sockets connect to corresponding pins of a DUT socket that is plugged into the lower connector block.

Connecting To The 178

Five small sockets in the 178 connection area are located close to the op amp symbol. These sockets must be connected to the corresponding terminals of the DUT using patch cords. The regulated supplies are labeled V+ and V-. Sockets connecting to the DUT's differential inputs are labeled +IN and -IN. The socket connecting to the DUT's output is labeled OUT.

External resistors, both source (R_S) and load (R_L), may be installed between the sockets so marked. These resistors remain unconnected until the EXT position of the SOURCE RESISTANCE or LOAD RESISTANCE switches is selected. Use the bifurcated pin terminals for easy placement and removal of external components. Two other resistors shown between the DUT's input and output are for optional external feedback components.

Other 178 connections on the card include:

CS-Collector Supply

STEP-Step Generator

EXT-External signal input (from front panel)

GND-Ground

Kelvin sensing of the Collector Supply voltage (Horizontal display) on the most clockwise position of the FUNCTION switch (COLLECTOR SUPPLY I) is possible by using the terminals indicated in Fig. 2-9. Besides connecting to these indicated terminals, the small foils, that connect to the collector supply and ground, must be cut. See Fig. 2-9.

Compensation and Other External Networks.

External components, for compensation or other purposes, can be conveniently added in the 'network' area shown in Fig. 2-9. Use the included pin terminals for easy installation and removal of components. Once in place, a network may be connected to either the DUT connection area or the 178 area using patch cords.

External Feedback Amplifier

Additional gain may be added to the closed loop test configuration by switching in the External Feedback Amplifier shown in Fig. 2-9. This added gain can be useful for testing low gain amplifiers, for example, in a test function such as CMRR or PSRR, where the DUT's output voltage should be held at zero volts. In these functions, the External Feedback Amplifier maintains the DUT's output closer to zero volts than would be possible if the loop gain were provided by only a low-gain DUT. If the output of a low-gain DUT is not held close to zero volts, an error signal appears at the input. This error signal due to gain adds to the input signal due to CMRR or PSRR and produces an erroneous measurement.

As a rule of thumb, this low-DUT-gain error may be significant whenever gain is more than 20 dB below CMRR or PSRR.

Fig. 2-10 is a simplified block diagram of the Feedback Amplifier with the 178 in the GAIN function. The components are added by the user to tailor gain to his particular needs. Capacitor C_F must be added to prevent loop gain from exceeding unity at high frequencies. Typically the R_F - C_F time constant should be about 0.01 second.

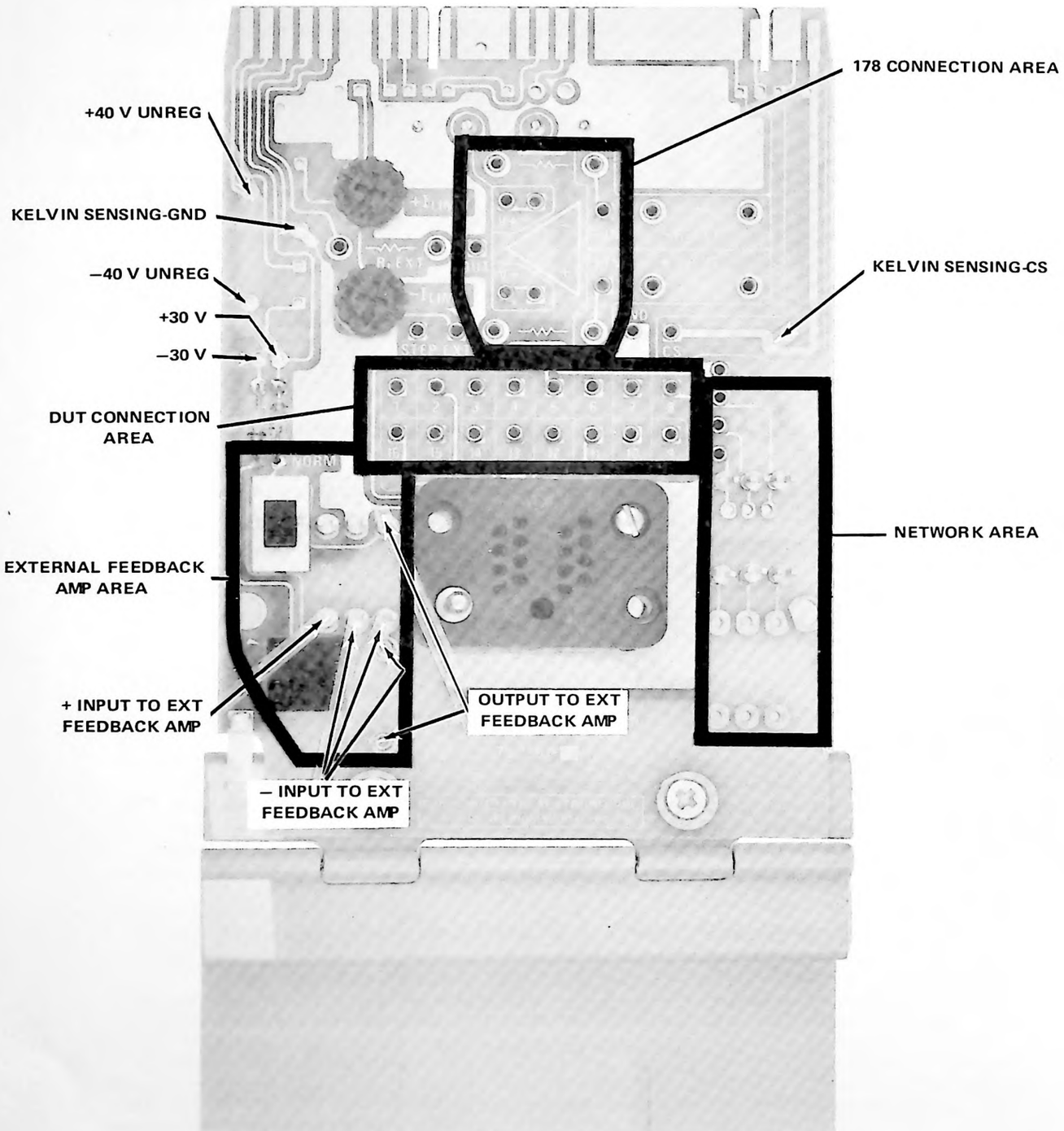

Fig. 2-9. The Standard Op Amp card.

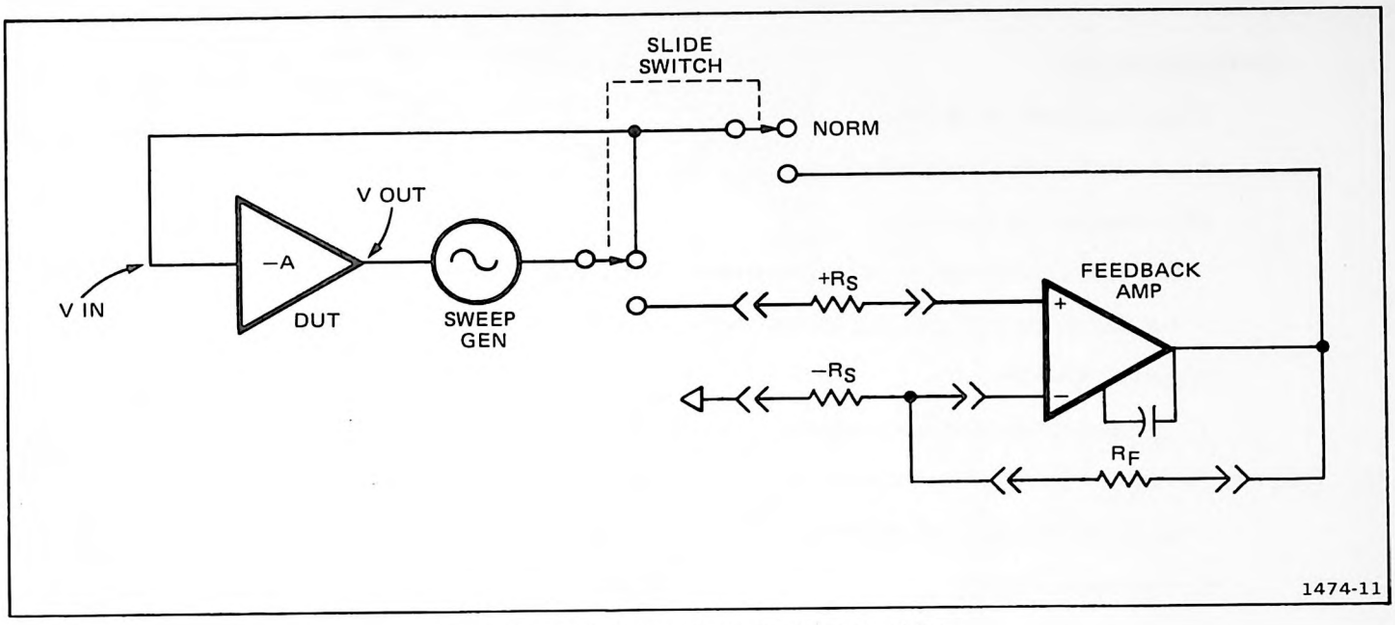

Fig. 2-10. Block diagram of the Feedback Amplifier.

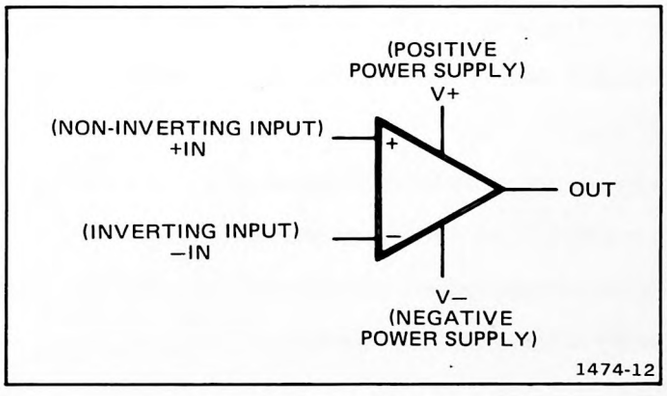

Fig. 2-11. Operational Amplifier symbol.

Useful Accessories

8—two-inch patch cords (red)	012-0200-00
8—four-inch patch cords (yellow)	012-0310-00
Blank Standard Op Amp Card	670-2567-01

Standard card without pin sockets for patch cords, current-limitng pots, external feedback amplifier (socket, switch, and zener diodes), patch cords, pin terminals and two 0.005 μF capacitors.

Transistor Adapter 013-0128-00

This three-terminal adapter plugs into the GND, STEP GEN, and COLLECTOR SUPPLY terminals on the 178 front panel. The adapter accepts TO-5 and TO-18 transistor types that may be tested in the COLLECTOR SUPPLY I function.

Potentiometer, 50 Ω 311-1568-00

For adjusting current limiting. Two of these pots are included on the Standard Op Amp card.

FIRST-TIME OPERATION

The most common IC amplifying device is the operational amplifier or Op Amp. The 178 can be used to test a large variety of op amps using the Standard Op Amp card (standard accessory).

The following procedure demonstrates the 178, using the Standard Op Amp card to test a 741 Op Amp (or similar device).

Amplifiers that require compensation for stable operation can be tested once the appropriate external components are added to provide loop stability at unity gain.

The objective of this procedure is to familiarize the operator with 1) the 178, 2) some basic op amp parameters, and 3) how the 178 measures these parameters.

Op Amp Terminology

The op amp symbol is shown in Fig. 2-11.

Normally, only input and output terminals are shown. The power-supply terminals and the Standard Op Amp terminology are included for convenience.

The minimum number of connections to an op amp is five (multiple op amps in a common package usually share the power-supply connections).

Some op amps require the addition of one or more passive components, often a single capacitor, to achieve stability. Such compensation usually requires connection to one or more terminals in addition to the five mentioned. Internally compensated op amps do not require external compensation.

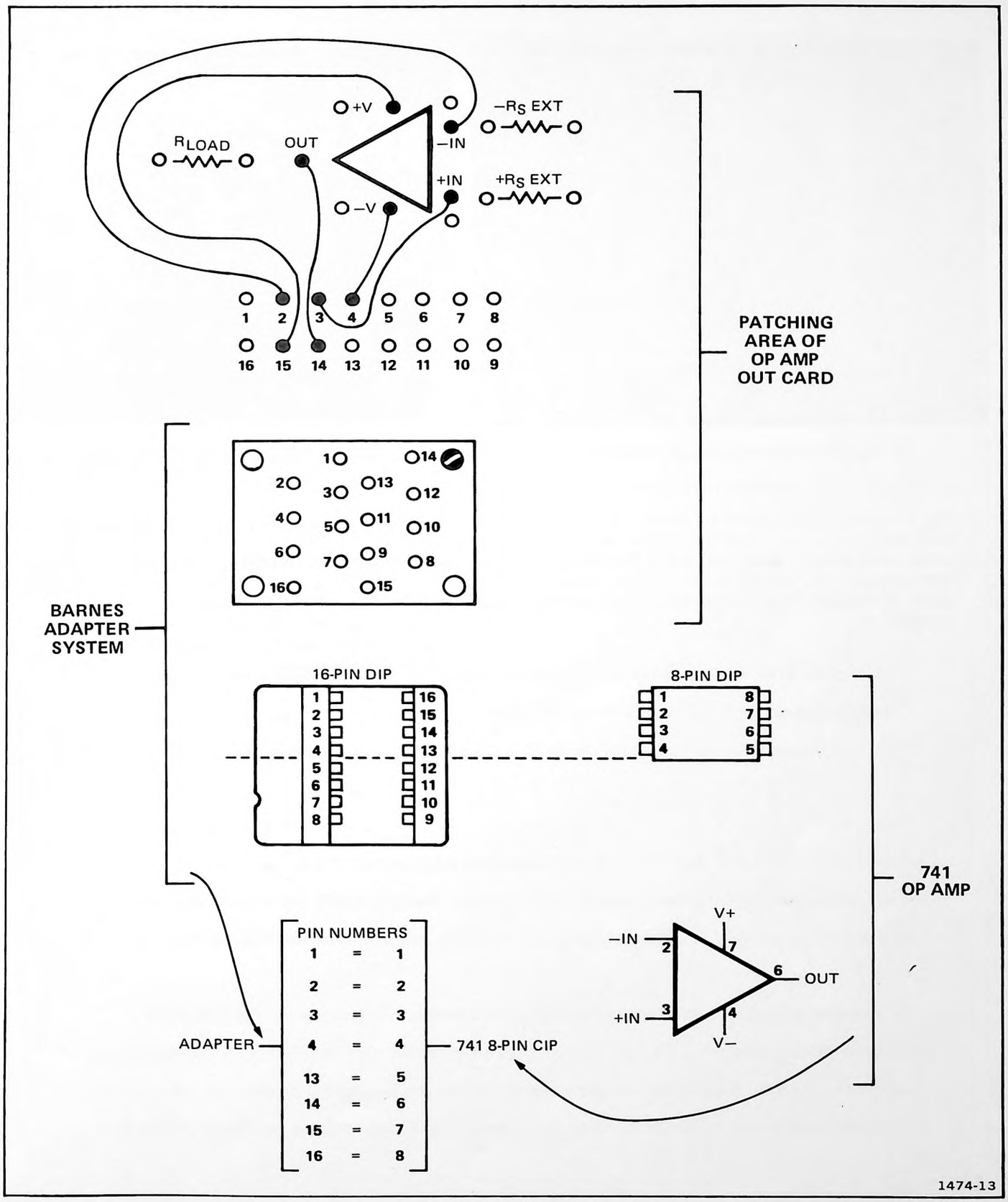

Fig. 2-12. 8-pin DUT plugged into the 16-pin adapter socket.

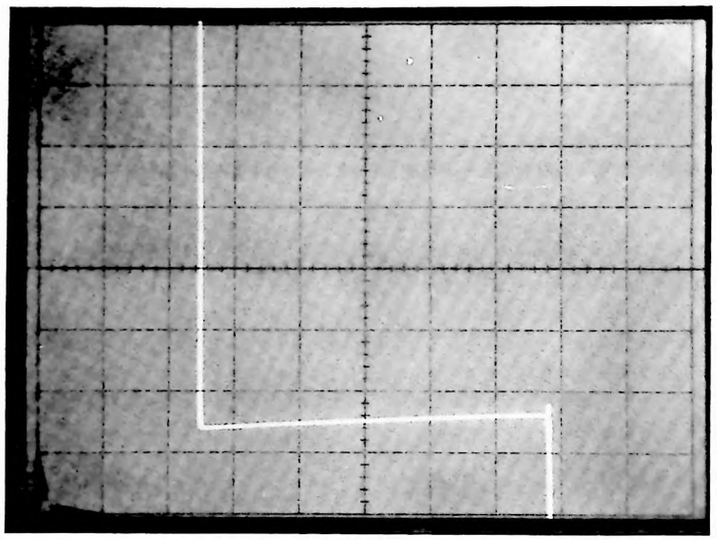

Fig. 2-13. Illustration of typical offset voltage.

Fig. 2-13. Horizontal deflection factor is 5 V/DIV. Vertical deflection factor is 1 mV/DIV. Zero volts is graticule center. The offset voltage of this 741 Op Amp is 2.5 mV. The display is the voltage at the inverting input terminal, which is –2.5 mV with respect to the non-inverting input terminal.

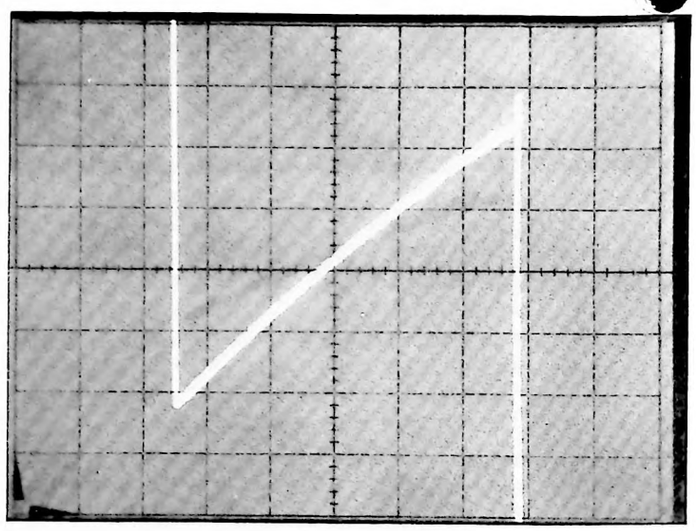

Fig. 2-14. Illustration of Op Amp Gain calculation.

Fig. 2-14. Horizontal deflection factor is 5 V/DIV. Vertical deflection is 50 μV/DIV. Vertically, true zero volts (dc) is far off-screen. Horizontally, zero volts is the graticule center line. The gain of this 741 Op Amp is approximately 115,000. The slope of the curve is the opposite of 'normal' gain curve. The inverting input goes positive for positive output signal. This inverted gain curve suggests internal positive feedback, and is typical of 741 amplifiers.

The supply voltage and output voltage are simply the potentials at the device terminals.

Potentials at the input terminals require more careful definition. The input voltage is the differential voltage at the input terminals. The common-mode voltage is that voltage common to both +IN and -IN terminals.

Characteristically, an op amp's output voltage is extremely sensitive to changes in its input voltage and insensitive to changes in common-mode and power-supply voltages. Parameters that reflect the magnitude of these characteristics are gain, common-mode rejection (CMR), and power-supply rejection ratio (PSRR). These and other characteristics are explained later in greater detail.

Connecting the Device Under Test (DUT)

The Standard Op Amp card is equipped with a two-piece socket system that adapts to several styles of IC packages. The base of the system is a sixteen-pin socket that is permanently attached to the Standard Op Amp card. Sockets for various IC packages plug into this sixteen-pin socket. Standard equipment includes a 16-pin socket for 16-pin dual-in-line packages.

A major benefit of the socket system is uniform pin numbering on the card. The 16 connections on the base socket are numbered on the DUT card and always correspond to the pin numbers of all upper sockets.

To provide the greatest flexibility in connecting to a device under test, patch cords are used on the card. Patch cords permit connecting the DUT terminals to the 178 for any DUT pin arrangement. This capability is especially beneficial when there is little standardization of pin connections.

Patching the DUT card for the 741

Remove the upper socket and swing the card cover away from the card. The card may be removed from the instrument or left plugged in when patching from the device card to the adapter socket. Switch the DUT SUPPLIES switch to OFF before placing or changing patch cords or inserting the card into the 178.

If the DUT has the same number of pins as the upper socket, the patch cord connections may be made directly. If the DUT has fewer pins that the upper socket, the DUT pin numbers do not correspond to the socket pin numbers on the card and pin-number substitution must be made. Fig. 2-12 illustrates an 8—pin DIP device plugged into the 16—pin upper socket, with corresponding pin numbers shown.

Current Limits

Two small potentiometers located on the Standard Op Amp card independently adjust the current limits for the positive and negative regulated supplies. The adjustment range is approximately 10 mA (counterclockwise) to 150 mA (clockwise). The typical setting for a 741 op amp test is one-quarter turn clockwise from the minimum-current position (ccw). This adjustment is not critical.

A method for accurate current limit adjustment is found in the Function of Controls section under Regulated Supplies.

Switch the DUT SUPPLIES switch to OFF and install the op amp card in the 178. Always switch the DUT SUPPLIES to OFF when patching or when removing or replacing the DUT card in the 178.

Initial Setup-Obtaining a Display

For convenience, the controls are grouped as follows: group 1, the unused controls; group 2, the occasionally used controls that may produce difficulties (if not set to their normal position); and group 3, the controls that most directly affect the setup and obtain a display.

Group 1 controls. Though the controls for Collector Supply and Step Generator are not used, proper setting of these controls prevent interference with normal measurements.

Set the MAX PEAK VOLTS switch to 25. At other settings of the MAX PEAK VOLTS switch the yellow light remains lighted. Set the MAX PEAK POWER-WATTS to .15 or .6 (to change power settings, pull the MAX PEAK POWER-WATTS switch and turn while in the pulled position). At .15 and .6 watts settings the Vertical Overrange circuitry will not cause the yellow light to flash under certain conditions (see Operation of Controls, Collector Supply section for more details).

Set the VARIABLE COLLECTOR % fully counterclockwise and COLLECTOR SUPPLY POLARITY to either +DC or -DC to reduce unwanted noise pickup at higher sensitivities.

Additional noise reduction is obtained by setting controls in the Step Generator. Press the STEP FAMILY SINGLE button to turn off the Step Generator and push to release the PULSE 300 μs button to lock out the pulsed mode.

Group 2 Controls. These controls should be set to the normal mode of operation. These controls are occasionally changed from the normal settings, but cause the least difficulty if the initial setup is made as follows:

Pull the POWER switch to ON.

Place the DISPLAY FILTER and DISPLAY INVERT in the normal mode (NORM button in).

The remaining controls in this group are on the display unit module (D1 or D2).

Set the BRIGHTNESS control (located only on the D1 Display Unit module) fully clockwise to the MAX position. If the BRIGHTNESS control is not set to MAX, the display can appear chopped or segmented. Use this control only for long retention of stored displays.

Set the INTENSITY control for a visible spot (push BEAM FINDER button if necessary).

Push the UPPER and LOWER STORE buttons and the UPPER and LOWER Erase selector buttons in. The Erase selectors permit erasing the corresponding areas of the screen.

Group 3. The initial display is obtained in the Offset function (turn FUNCTION switch to OFFSET V). In OFFSET, the Op Amp output voltage is displayed horizontally and the input voltage is displayed vertically. Since measurement is made at the DUT's inverting input terminal (the non-inverting terminal is grounded), the crt display actually shows input voltage inverted. All input voltage measurements in other functions are also inverted.

Set the +SUPPLY control to 15 V (or other specific voltage within the rating of the DUT). Set the -SUPPLY control to TRACK +SUPPLY (fully counterclockwise). Be sure the detent is engaged. In this mode, both supplies are controlled by the +SUPPLY control.

Set the LOAD RESISTANCE to 50 kΩ and the SOURCE RESISTANCE to 50 Ω.

Turn the SWEEP AMPLITUDE control fully counterclockwise (zero amplitude). Be sure that this control is pushed in (not in manual mode). Set the SWEEP FREQUENCY control to 10 Hz with the VARIABLE fully clockwise (X1).

Set the VERT UNITS/DIV to 10 mV/DIV and the HORIZ VOLTS/DIV selector (on the 577 mainframe) to 5 V/DIV, COLLECTOR. Note the lighter shaded arc along a portion of the VERT UNITS/DIV knob skirt. This arc represents the limits of voltage measurements from 10 μV/DIV to 50 mV/DIV. Current measurements use all switch positions. Whether voltage or current is displayed on the Vertical axis depends on the setting of the FUNCTION selector. In the voltage functions, the VOLTS lamp goes out if the VERT UNITS/DIV is not within the lighter-shaded arc.

While holding the DISPLAY ZERO button (on the 178) pressed, adjust the POSITION control to move the spot to the graticule.

The instrument is now ready to obtain an Offset function display. In this display the op amp's differential voltage is displayed on the vertical axis and the output voltage on the horizontal axis.

Install the DUT in the adapter socket and move the DUT SUPPLIES switch to ON. A spot should appear near the center of the graticule. Turn the SWEEP AMPLITUDE control clockwise to increase the Sweep Generator output. The spot should expand to a horizontal trace (adjust for about two divisions of deflection each side of graticule center).

The instrument is now ready to measure Op Amp parameters. If the proper display is not obtained, try the following recheck procedure. If the proper display is obtained, proceed with measuring Offset Voltage.

Troubleshooting the Setup

1. Check the Op Amp connections on the device card to determine:

   a. That the proper pin numbers are connected to the five essential 178 terminals (+V, -V, +IN, -IN, and OUT).

   b. The DUT is installed properly in the test socket, i.e., DUT pin numbers correspond to socket-pin numbers.

   c. Allowance was made for pin number equivalents if the DUT has fewer pins than the test socket.

2. Recheck the group 3 settings with special attention to:

   a. HORIZ VOLTS/DIV selector (in COLLECTOR VOLTS segment, not BASE), and the deflection factor is correct (5 volts, not 0.5 volts).

   b. SOURCE RESISTANCE is not in EXT. EXT disconnects the inputs unless resistors are added to the device card.

   c. VERT UNITS/DIV selector is not in the current only section of its range and the correct sensitivity is selected (go to 50 mV/DIV).

   d. DUT SUPPLIES switch is ON.

3. Try another Op Amp.

Measuring Offset Voltage

Offset voltage is defined as the input voltage (differential voltage at the input terminals) required to obtain zero volts at the amplifier output.

The preceding steps prepare the 178 to measure offset voltage. The display shows the amplifier input voltage on the vertical axis (inverted) and the output voltage on the horizontal axis.

Before actually making a measurement from the display, it may be necessary to become familiar with the operation of several controls and their effects on the measurements.

Op Amp's Output Operating Range. In the Offset function,the SWEEP AMPLITUDE control adjust the op amp output voltage excursion. Actually, the Sweep Generator indirectly controls the op amp output by causing the feedback loop (the op amp is a part of the feedback loop) to control the op

amp input voltage.

Slowly turn the SWEEP AMPLITUDE control and note the effect on the horizontal display. Increase the SWEEP AMPLITUDE until vertical lines appear at both ends of the horizontal display. These vertical lines mark the limits of the op amp output swing. These vertical lines are produced by the feedback driving the input beyond the op amp operating range or to the point at which the op amp loses gain. This range should be somewhat less than the power-supply voltage.

Reduce the Regulated Supply voltage by slowly turning the +SUPPLY control counterclockwise. Notice that the output operating range decreases. Reset the +SUPPLY control to 15 volts.

Slow Sweep Frequency and Storage. It is quite often necessary to measure op amp parameters at very low frequencies. The convenience of storage becomes apparent at these low frequencies.

Adjust the SWEEP AMPLITUDE control so that the vertical excursion at each end of the horizontal trace (where the op amp reaches its output limits) is small.

Turn the SWEEP FREQUENCY control to .1 Hz with the VARIABLE fully clockwise (X1). Many op amp measurements are made at .1 Hz or lower.

Push both UPPER and LOWER STORE buttons to put the display module in the storage mode. Push the UPPER and LOWER Erase selector buttons and push the ERASE button to prepare the screen for storage.

Note that the storage mode provides a flicker-free, easy-to-view trace from a slow-moving spot.

Use the ERASE button to clear the screen of unwanted displays. The display is automatically erased between some of the FUNCTION switch positions. This procedure leaves the use of the erase and storage function to the operator's discretion.

Manual Operation. Manual Sweep operation is now demonstrated, although this mode of operation is used infrequently.

In manual sweep, the Sweep Generator is replaced with a manually-operated potentiometer. Pull the SWEEP AMPLITUDE control out and rotate the control in both directions. Note that the op amp output can be set to any desired voltage within its operating range. Push the SWEEP AMPLITUDE control in and reset the control to display a small vertical excursion at each end of the trace.

Larger vertical excursions, or overdriving the inputs, does not damage a well-designed op amp. However, large vertical excursions cause the moving spot to spend excessive time off-screen in the more sensitive measurements.

Op Amp Offset Voltage . The display can now be used to measure offset voltage. Increase the

vertical sensitivity (turn the VERT UNITS/DIV control clockwise until the largest on-screen vertical deflection is obtained). Offset is measured on the vertical axis where the output voltage passes through zero volts (see Fig. 2-13). The vertical deflection is the differential voltage between the op amp input terminals.

Push the DISPLAY ZERO button to check for zero in the display. Position the spot to graticule center as necessary.

Any trace tilt is due to op amp gain, which is covered in the next step.

A loop may be displayed due to op amp phase shift. The amplitude of the loop can be reduced by either reducing the sweep frequency (turn the SWEEP FREQUENCY VARIABLE counterclockwise), or by reducing the sweep amplitude. To eliminate looping, manually position the op amp output to zero volts in the horizontal axis (see Manual Operation, previously described).

Measuring Gain. Op amp gain is defined as the change in output voltage divided by the change in the differential voltage at the input terminals. Gain is one measure of how faithfully an op amp processes a signal, when operating within a feedback loop. High gain op amps introduce less distortion or error (from ideal response dictated by the feedback network) than do low-gain op amps.

As the output voltage of an op amp changes, the input voltage of a low-gain op amp changes more than the input voltage of a high-gain op amp. The change in input voltage due to feedback (Δ input V), has the same effect on the overall circuit as an input signal of the same amplitude.

Therefore, the effective input signal is input signal minus Δ input V. If the change in input voltage is small with respect to the signal (as it should be in a practical circuit), the error introduced due to gain is approximately the ratio of input voltage to signal.

$$\% \text{ error} \cong \frac{100 \times \Delta \text{ input V}}{\text{signal}}$$

If the op amp feedback network provides signal amplification, new terms must be substituted into the above ratio from the following relationships, where ΔV_o is the change in op amp output voltage.

ΔV_o = Network Gain x Signal, and

ΔV_o = Op Amp Gain x Δ Input V

Therefore, by substitution,

$$\% \text{ error} \cong \frac{100 \times \text{Network Gain}}{\text{Op Amp Gain}}$$

Measurement of op amp gain can be made using the same type display as in the Offset function. However, since the offset voltage of the op amp is usually quite large relative to the input voltage change, the vertical deflection factor cannot be made sensitive enough to measure gain and maintain an on-screen display. This problem is solved by switching the FUNCTION switch to the GAIN position. In the GAIN position, offset voltage is nulled and the vertical deflection factor can be decreased to display the slope of the input voltage curve.

Automatic Offset Null. With the FUNCTION switch in the GAIN position, momentarily press the DISPLAY ZERO button. In the GAIN function, the circuit configuration is essentially the same as in the OFFSET function, except that an electronic sample and hold circuit is added in the op amp feedback loop. When the DISPLAY ZERO button is pressed, the sample and hold circuit detects and nulls any offset voltage in the op amp. When the DISPLAY ZERO button is released, the sample and hold circuit remembers and maintains this offset null. The automatic nulling occurs in the 178 and is not related to any Offset Null terminals on the op amp.

The display in the GAIN function is the same as in OFFSET function except that the trace should pass nearly through graticule center.

The display is uncalibrated in the absolute sense, as the display provides information only about changes in input voltage. The location of zero volts is lost when the sample and hold circuit nulls offset voltage.

Switch the VERT UNITS/DIV to display about three divisions vertically. Press the DISPLAY ZERO button (reset the sample and hold circuit) to maintain the display on screen. Make frequent use of the DISPLAY ZERO button in all functions that measure Δ Input V (GAIN, CMRR, and all PSRR positions). It is often necessary to reset the sample and hold circuit after changing the VERT UNITS/DIV switch, after changing the FUNCTION, or after prolonged operation in which the sample and hold may drift. Only occasional reminders to reset the DISPLAY ZERO will be made for the remainder of this procedure.

It is not necessary that resetting the sample and hold causes the trace to pass through the screen center. The 178 is designed to provide an on-screen trace for amplifiers with 25 mV or less of offset. Use the vertical POSITION control (on 577) for minor adjustments to facilitate measurement.

Phase Shift. In high-gain op amps, phase shift can occur at extremely low frequencies. Phase shift results in a vertical separation of the positive-going and negative-going traces on the display. At high vertical sensitivities, even small amounts of phase shift become apparent.

With the VERT UNITS/DIV selector set for three or more divisions of deflection and the SWEEP FREQUENCY selector at .1 Hz, some phase shift may be displayed. Increase the frequency to 1 Hz or higher and observe the phase shift. Return to .1 Hz. If excessive phase shift exists at this frequency, use the VARIABLE to further reduce the frequency.

Noise. All operational amplifiers exhibit some degree of noise. At times, this noise is great enough to interfere with gain measurement. Normally, the noise is small enough that the center of the trace can be determined. Occasionally the Display Filter in the 577 Mainframe can be used to reduce trace width. The Display Filter eliminates all but the lowest frequency noise components from the display.

Push the DISPLAY FILTER NORM button to release the button to the out position. The noise reduction in the displayed trace should be noticeable unless the op amp is exceptionally noise free. Notice that some phase shift may be introduced by the filter.

The shift effects of the filter may be easily observed by displaying both the filtered and unfiltered traces by using display storage.

The operator can then decide (from the display) whether the filter aids or hinders measurements for these particular measurement conditions. Reducing the sweep frequency reduces phase shift caused by the display filter.

To prevent the filter from inadvertently causing future erroneous measurements, push the DISPLAY FILTER NORM button in, once a measurement has been made (before proceeding to new functions or operating conditions). Check the effects of the filter on phase shift before each use.

Measuring Op Amp Gain. Set the VERT UNITS/DIV for an on-screen display of three divisions or greater. Set the Sweep Frequency for acceptably small phase shift looping. Select an appropriate change in horizontal deflection and measure the corresponding vertical deflection (see Fig. 2-14). The op amp gain is the change in output voltage (horizontal) divided by the corresponding change in input voltage (vertical). The gain is inversely proportional to the slope of the trace. The flatter the trace, the higher the gain. See the Applications section for additional gain information.

Measuring Common-Mode Rejection Ratio

Common-mode rejection ratio, CMRR, is a measure of the ability of an op amp to ignore changes in the common-mode voltage at the input. Ideally, an op amp should respond only to the input voltage (differential voltage between the input terminals) and be insensitive to common-mode voltage (average voltage between input terminals). If the common-mode voltage changes on an imperfect (real) op amp,

the effect is the same as through a slight change in input voltage occured. CMRR is obtained by dividing the change in common-mode voltage by the change in input voltage required to hold the op amp output voltage constant. In the 178, the op amp output voltage is held at zero volts during CMRR measurements.

Common-Mode Operating Range. Turn the FUNCTION selector to the CMRR position. Set the SWEEP FREQUENCY control to 1 Hz, VARIABLE fully clockwise. Press the DISPLAY ZERO button if the display is off screen. Set the VERT UNITS/DIV so that some portion of the trace is relatively horizontal. In this function, the horizontal deflection is the common-mode voltage (the average voltage between the input terminals). The vertical axis displays the change in input voltage between the input terminals. The Sweep Generator drives the common-mode voltage in CMRR function. Turn the SWEEP AMPLITUDE control counterclockwise and notice the effect on horizontal deflection. Turn the SWEEP AMPLITUDE control clockwise until both ends of the display go off screen.

In CMRR function, the output of the op amp is held at zero volts. The display is less subject to the effects of phase shift noted in the GAIN function. Increase the Sweep Frequency to verify the lower susceptibility to phase shift. Set the frequency low enough to minimize phase shift.

The op amp's common-mode operating range is that range of common-mode voltage at which the op amp is insensitive to changes. The crt graphically displays this range. The flattest portion of the trace indicates the least sensitivity to common-mode voltage (the best CMRR). The display shows relative performance over a range of common-mode voltages. Reduce the power-supply voltages (+SUPPLY control counterclockwise) and notice the decrease in common-mode operating range. Common-mode range, therefore, depends on supply voltage. Return the +SUPPLY to the original setting (15 volts).

Measuring the Op Amp CMRR. Choose an area of interest in the common-mode operating range. Decrease the VERT UNITS/DIV until the trace has an easily measured slope or vertical deflection. CMRR is measured by selecting the appropriate change in horizontal deflection and measuring the corresponding vertical deflection. The op amp CMRR is the change in common-mode voltage (horizontal) divided by the change in input voltage (vertical). CMRR is inversely proportional to the slope of the trace; the flatter the trace, the better or higher the CMRR. CMRR is discussed further in the Applications section.

Measuring Power-Supply Rejection Ratio

Power-Supply Rejection Ratio, PSRR, is a measure of the ability of the op amp to ignore changes in the power supply voltages. An ideal op amp does not respond to changes in the power-supply voltage.

If the power-supply voltage changes in the imperfect op amp, the effect can be related to an equivalent change in the input voltage. PSRR is obtained by dividing the change in power-supply voltage by the change in input voltage required to hold the output voltage constant. In the 178, the op amp output and common-mode voltage are both held at zero during the PSRR measurement.

The 178 provides three PSRR functions. PSRR can be measured from variations in the positive power supply (+PSRR), for variations in the negative power supply (-PSRR), or for output-of-phase variations in both power supplys (± PSRR). In the ± PSRR function, the positive supply voltage increases (more positive) while the negative supply increases (more negative) and vice versa.

In PSRR functions, the horizontal deflection is the power-supply voltage, positive in +PSRR, negative in -PSRR, and positive only in ±PSRR, although both supplies are sweeping. The amplitude and frequency of the power supply variations are controlled by the sweep generator controls. The vertical deflection in all PSRR functions is the change in the op amp input voltage. Because of the similarity of all PSRR functions, only one is presented.

Op Amp PSRR. Turn the FUNCTION selector to ±PSRR. The display shows the input voltage variations (vertical) as a function of the supply voltage (horizontal). Decrease the vertical sensitivity if vertical deflection is excessive. Press DISPLAY ZERO if necessary. Turn the SWEEP AMPLITUDE control fully counterclockwise and note that the horizontal display indicates the supply voltage as set by the +SUPPLY control. Turn the SWEEP AMPLITUDE clockwise enough to conveniently measure horizontal deflection. Increase the vertical sensitivity, if necessary, to measure the corresponding vertical deflection. PSRR is the change in power-supply voltage (horizontal) divided by the change in input voltage. PSRR is inversely proportional to the slope of the trace.

Increase the sweep amplitude until the trace goes off screen near zero volts. At this point the op amp input can no longer hold the output at zero volts.

The power-supply voltage at which the trace goes off screen is the minimum operating supply with both common-mode and output voltages of the op amp held at zero volts. (This operating condition is unrealistic for most applications.)

Measuring Input Currents

Input bias current is that current flowing into either the +IN or -IN terminals. Input Offset current is the difference in the +IN current and the -IN current. Normally these currents are specified at zero common-mode voltage. The 178 displays input bias current of the op amp (vertical) as a function of common-mode voltage (horizontal), thus permitting input bias-current measurements at zero volts common-mode,

or over the common-mode operating range. The op amp output is held at zero volt during bias current measurements.

Op Amp Bias Current. Turn the FUNCTION selector to +INPUT I. Turn the VERT UNITS/DIV switch until sufficient deflection is obtained to make a measurement. In a current-measuring function, all positions of the VERT UNITS/DIV switch are usable (in voltage functions, only those positions in the light-shaded arc are usable). The current measured in this function is the current into the non-inverting (+) input terminal.

Once input-bias current is measured at the desired common-mode voltage, or range of voltages, turn the FUNCTION selector to -INPUT I. Current into the inverting (—) terminals can now be displayed and measured. In the most sensitive positions it is necessary to remove the op amp from the test socket to check zero-current level.

Op Amp Input Offset Current. When the input bias currents have been determined for both input terminals, the input offset current can be obtained by finding the difference.

The display is not automatically erased when the FUNCTION selector is moved from the +INPUT I to -INPUT I position. Both curves can be viewed simultaneously. Better resolution is required to measure input offset current. Use the following procedure:

Turn the FUNCTION switch to +INPUT I. Vertically position the trace to graticule center using the vertical POSITION control. Pull the vertical POSITION control to magnify the vertical display. Note that the deflection factor has changed by a factor of ten and the new deflection factor is indicated on the VERT UNITS/DIV knob skirt.

If necessary, reposition the trace vertically to place the display on screen. Push the ERASE button to clear the storage screen.

Next, switch to the -INPUT I function. If well positioned, both traces of bias current are displayed at ten times the normal resolution. Input offset current, the current represented by the distance between the two traces, is measured at the desired common-mode voltage. If the second trace (-INPUT I) is not displayed on screen, reposition the trace, erase the display and repeat both functions.

If the device has excessively large input offset current, it may be necessary to reduce the vertical sensitivity or make the measurement at the normal (unmagnified) deflection factor.

Measuring Supply Current

Supply current, as measured on the ninth and tenth positions of the FUNCTION selector, is that current in the +V or -V supply terminals of the op amp. The output terminal is held at zero volts for this measurement. Only one of these functions is required for testing op amps. With the amplifier output held at zero volts, and with insignificant current in the input terminal, the currents in the supply terminals have equal magnitude (but opposite sign). The two separate functions are provided for use with device cards other than the Standard Op Amp card. In the supply current functions, the horizontal display is the power-supply voltage and the vertical display, the supply current.

Op Amp Supply Current. Turn the SWEEP AMPLITUDE control fully counterclockwise. Switch the VERT UNITS/DIV selector to about 10 mA/DIV. Turn the FUNCTION selector to +SUPPLY I. The display should be a spot. The horizontal spot deflection is equal to the supply voltage. Decrease the VERT UNITS/DIV to produce an easily measured vertical deflection. The vertical deflection is a point measurement of the supply current.

Decrease the supply voltage using the +SUPPLY voltage control while in stored mode. The stored display shows how supply current varies with supply voltage. Return the +SUPPLY voltage to its original setting and retain the stored display.

Next, slowly turn the SWEEP AMPLITUDE control clockwise to display another trace. This trace probably does not correspond to the stored trace obtained previously. The second trace shows how power-supply current varies while only the positive-supply voltage changes (controlled by the Sweep Generator) while the negative supply remains constant. It is important to keep in mind the difference in these two traces.

CIRCUIT DESCRIPTION

This section of the manual provides a description of the major circuits in the 178 Linear IC Test Fixture.

Power Supply

The power supply consists of a sine-wave generator, a sweep amplifier, supply regulators, current-limit adjustment, and current overload indicators.

Sine-Wave Generator. This generator produces a square wave, integrates the square wave, then shapes the triangular waveform (out of the integrator) into a sine wave.

The square-wave generator-integrator circuit is a feedback device consisting of a comparator, Q402 and Q404; a switch, consisting of Q406 and Q408; and an IC integrator, U424-C424-C425. The outputs of U424 and Q408 are summed through R402 and R401 and applied to the input of the comparator. The result is that Q408 emitter swings from approximately -29 volts to approximately +29 volts, which is applied through the frequency selecting resistances (switched and variable) into the input of integrator U424.

The integrator output, a triangular wave, is then applied to the diode shaping circuit, Q442-CR443-CR444-CR445 (for the negative-going excursion) and Q452-CR453-CR454-CR455 (for the positive-going excursion).

The changing load and non-linear characteristics of the diodes shape the triangular input into a sine wave.

The sine wave is then fed into U432A through R449. U432A output, pin 1, swings from 0 to approximately +6 volts when F4 switch contact is closed (to -30 volts) and from -3 volts to +3 volts when F4 is open.

When the SWEEP AMPLITUDE switch is pushed in (the auto sweep position) the sine-wave generator output is applied across R460 to ground. R460 wiper is connected to the sweep amplifier. Thus, the SWEEP AMPLITUDE control sets the amplitude of the sine-wave generator output.

When F4 is open, Q462 is turned off, permitting the voltage at pin 7, U460, to be at the level set by R560. When F4 is closed, applying -30 volts to R461, Q462 saturates, pulling the + Input, pin 5 of U460, to ground. The output of U460 (pin 7) follows. In this mode, (in manual sweep) the bottom of R460 (SWEEP AMPLITUDE) is at ground potential, limiting the maximum voltage across R460 to about 6 volts during PSRR and +SUPPLY I tests and 3 volts for all other tests.

Sweep Amplifier. The sweep amplifier consists of a FET, Q520, an integrated operational amplifier, U540, and four bipolar transistors, Q536, Q538, Q546, and Q548. The amplifier is basically an operational amplifier having a gain of 10. The input resistance is R527 and the feedback resistance is R549.

The input signal from pin 2, P222, is applied to Q520 source. Q520 is quiescently biased on, permitting the signal to be amplified and applied to other circuits (depending on the position of the FUNCTION switch). Q520 can be biased off, inhibiting the input signal to the sweep amplifier. Q520 is biased off when the DISPLAY ZERO is pressed, and between positions on the FUNCTION switch, whenever the Sample and Hold circuit is being reset.

The sweep amplifier output is connected to the DUT power supplies to sweep the supplies in PSRR and SUPPLY I modes; to force the DUT output in OFFSET and GAIN modes; or to sweep the DUT inputs in CMRR and INPUT I modes. The switching for these modes is accomplished by the FUNCTION switch.

Supply Regulators. The signal (sine wave from the sweep amplifier) is applied to the +DUT supply via switch contact F8, divided down by R570-R571, applied to U576, which sets the output voltage of Q584, setting the +DUT voltage out.

In the same manner, the signal (sine wave from the sweep amplifier) is applied to the -DUT supply via switch contact F3, divided down by R551-R552, and applied to U476, which sets the output voltage of Q484, setting the -DUT voltage out.

The +SUPPLY dc level is set by U432B and R560 (the three-turn precision control). This dc level is applied to pin 2, U576. The result of the dc level on pin 2 of U576 and a sine wave on pin 3 is a dc level at the output, pin 6, swept at the sine-wave rate.

The -SUPPLY dc level is set by R565, through switch S565, when out of the detent (fully counter-clockwise) position in the same manner as the +SUPPLY dc level is set. The -SUPPLY can be swept by the sweep generator at the sine-wave rate.

When the -SUPPLY control is in the detent position (TRACK +SUPPLY), both -SUPPLY and +SUPPLY have the same absolute value of voltage out, under control of the precision +SUPPLY dial. The DUT supply voltages are, therefore, identical except for polarity.

When the SWEEP AMPLITUDE knob is pulled out, the sweeping of the DUT supplies is done manually.

Pulling the SWEEP AMPLITUDE knob disconnects the sine-wave sweep from the sweep amplifier, and substitutes the output of U460A and B across R460. U460A and B pick off the voltage from the +SUPPLY control. U460A is a non-inverting feedback amplifier and U460B is an inverting feedback amplifier, applying voltages of opposite polarity to the ends of R460. The voltage picked off at R460 wiper is fed to the sweep amplifier to sweep the DUT supplies manually. The sweep amplitude can never be greater than the voltage set from the -SUPPLY and +SUPPLY voltages.

Since each of the output ICs (U476 and U576) is capable of delivering only about 20 mA to the load, Q484 and Q584 act as pass transistors to provide the necessary DUT load current.

Current Limiting and Overload Indication. Current limiting and overload indication are provided for each of the DUT supplies.

I Limit, the limit resistor on the DUT card (the potentiometer for the DUT +SUPPLY limiting), provides the voltage to Q572 to cause current limiting. When the drop across R284 and the I limit resistor in parallel exceeds 0.5 volts, Q572 turns on, pulling the negative output of U576 positive, causing the output to go negative, limiting the output current. At the same time, as Q572 turns on, Q578 is turned on, causing the +OVERLOAD lamp to light, indicating the overload condition.

The same current-limiting action occurs in the negative supply, turning on Q472-Q478, limiting the current and indicating the overload.

Q492-Q592, and associated circuitry are a clipping circuit to ensure that in the common-mode test (CMRR and Input currents) the sweeping voltage can not exceed the DUT supply voltages. If the common-mode voltage exceeds either of the supply voltages, the appropriate transistor turns on, drawing current from the sweep amplifier, limiting the common-mode sweep voltage.

Feedback Amplifier

The feedback amplifier consists of three transistors: an emitter follower, Q214, and a non-inverting feedback amplifier, Q222-Q226. R223 is the input resistor and R227 is the feedback resistor, providing a gain of approximately three.

The principal inputs to the feedback amplifier are: from the DUT via R205, and from the sweep amplifier through contact F9 and R206. In the OFFSET V and GAIN modes of the FUNCTION switch the summing point of the feedback operational amplifier is the base of Q214, the junction of R205-R206.

The feedback amplifier output connects through P235, through the interface board to the DUT card, permitting the addition of an amplifier on the DUT card.

The feedback amplifier output connects to the Sample and Hold circuit, through contact F5, to Q252A gate. This feedback amplifier also drives the DUT input attenuators, R231, R233, R235, and R238.

The feedback amplifier output into the Sample and Hold circuit is controlled by two switches, FUNCTION switch contact F5, and DISPLAY switch (S200) contact D.

Contact F5 closes momentarily between some FUNCTION switch positions, and is closed in some of the FUNCTION switch positions as well.

S200D, the DISPLAY ZERO switch, a spring-return, pushbutton switch, connects the feedback amplifier output to the Sample and Hold input.

The Sample and Hold is basically a dual FET input, Q252, and an IC operational amplifier, U250. The hold configuration is an integrator, using C254 as the integrating capacitor.

The Sample and Hold output is fed to the DUT card through FUNCTION switch contact F7 and feeds half (R232, R234, R236, and R239) of the DUT attenuator. R232, R234, and R236 each has an adjustable resistor in series, to permit this half of the attenuator to be matched exactly to the other half (R231, R233, R235, and R238).

Both sides of the DUT attenuator are switched by the VERT UNITS/DIV switch contacts, V9, V10, V18, V19, V20, and V21. This switching permits attenuation ratios of 1000:1, 100:1, and 10:1.

The DUT attenuator output taps connect through FUNCTION switch contacts to the + and -DUT inputs. The DUT inputs can be switched by FUNCTION switch contacts to insert the vertical current-measuring circuit. In the DUT +Input, this switching is performed by FUNCTION switch contacts F12, F13, and F15. In the -Input the switching is performed by contacts F11, F14, and F16.

FUNCTION switch contacts F9 and F10 determine whether the sweep amplifier forces the DUT output, through R206 (F9), or sweeps the DUT inputs via the common junction of R238-R239 through contact F10.

Transistors Q280, Q284, and Q286 control the VOLTS, AMPS, AND VERT UNITS/DIV MAG ON lamps. When both contacts, F6 and V1 are open, Q280 and Q286 are on and the AMPS and VERT UNITS/DIV MAG ON lamps are lighted. When F6 closes, the +5 volts applied to Q284 base turns Q284 on, and Q286 off (VOLTS lamp lights and AMPS lamp extinguishes). When V1 also closes, the +5 volts applied to Q280 base turns Q280 off, extinguishing all lamps.

Vertical Preamplifier

The Vertical Preamplifier measures either current or voltage, depending on the setting of the FUNCTION switch.

As a current-measuring circuit, the preamplifier floats with the 0+15 V, 0-15 V, and ØComm Supply from the 577.

As a voltage measuring circuit, the preamplifier reference is ground. When the preamp is connected to measure voltage it always monitors the feedback amplifier via F5, (F3 open), which is the input to the DUT attenuators. Whenever the preamplifier is measuring voltage, the point being measured is the DUT -input.

When the preamplifier is measuring current, the preamp can be inserted in the + or -DUT input leads, + or -power supply leads, or in the Collector Supply.

The Vertical Preamplifier (for current measurements) consists of Q310A and B and U340, and serves as a current to voltage converter. The high sensitivity current switching is in the feedback around Q310A and B and U340. Additional decade switching at lower sensitivities is done at the current amplifier input (R301, R302, and R305).

The 1-2-5 switching for both voltage and current is done around the last stage of the vertical preamplifier (R361, R362, and R363).

Additional decade switching is in the feedback around U340B (R342, R344, and R345).

The DUT attenuator (R231, R233, R235, and R238 on the Feedback Amplifier) also provides decade switching for the voltage modes. The output of the vertical preamp, pin 1 of U350A, is 0.5 V/Div into the 577.

U350B compensates for current in the stray capacitance between U310B gate and chassis ground (causes looping in the display). The voltage between pin 6, U350B and chassis ground is sensed in R316 and R317. The compensating signal at pin 7, U350B, is coupled via C318 to Q310B gate.

R315 adjusts the voltage at pin 7, and C315 is a noise suppressor.

R318 is a surge current limiter.

Function Switching

Each FUNCTION switch setting changes the circuit configuration. The configuration for each FUNCTION switch position is shown in the series of block diagrams, figures 3-1 through 3-11.

An overall block diagram (SWITCH CONFIG BLOCK DIAGRAM) is provided in the DIAGRAMS section, preceding the FUNCTION/VERTICAL SWITCHES diagram. This block relates the circuits to the FUNCTION and VERT UNITS/DIV switch contact numbers.

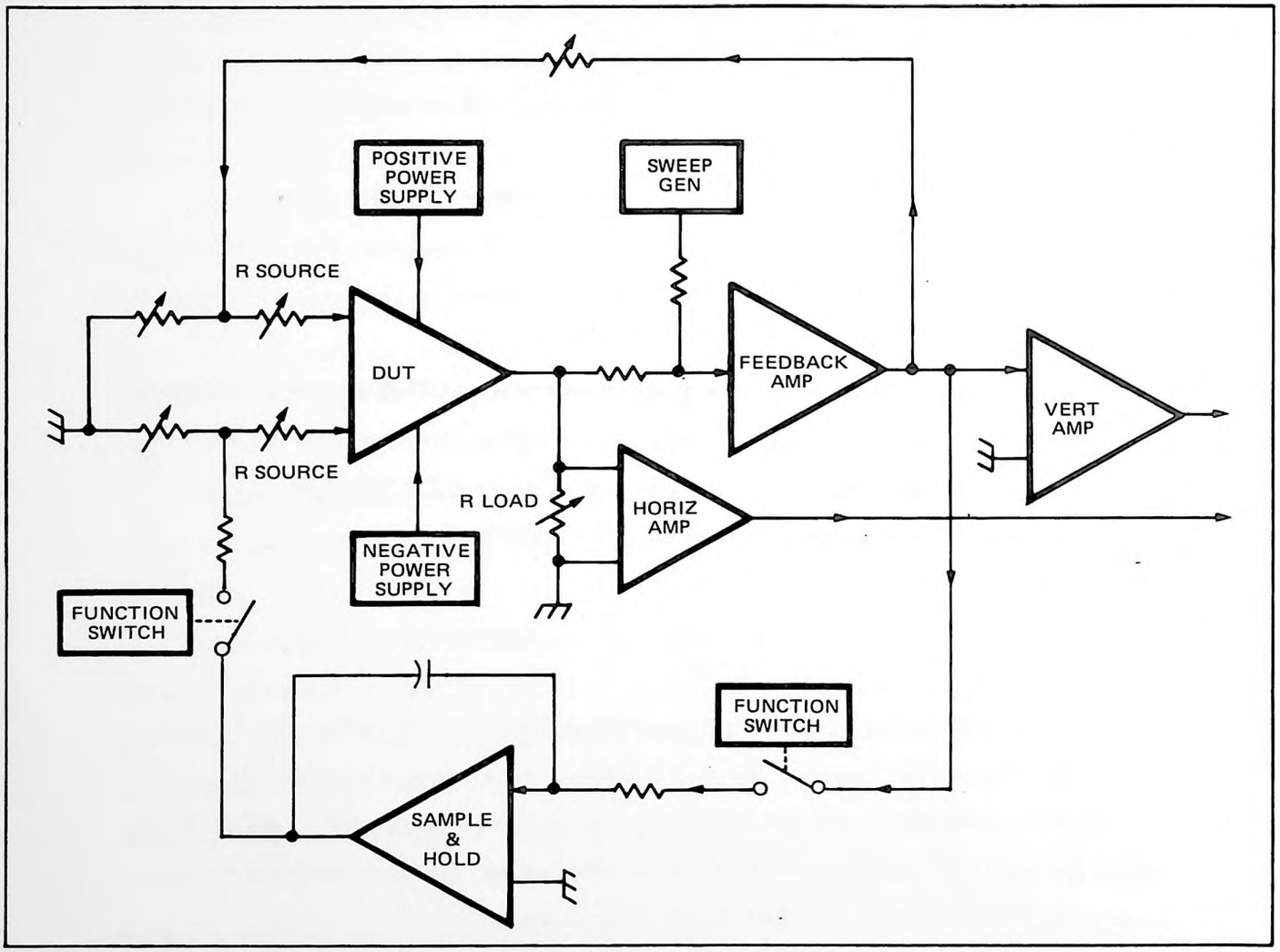

Fig. 3-1. Block diagram OFFSET V Configuration.

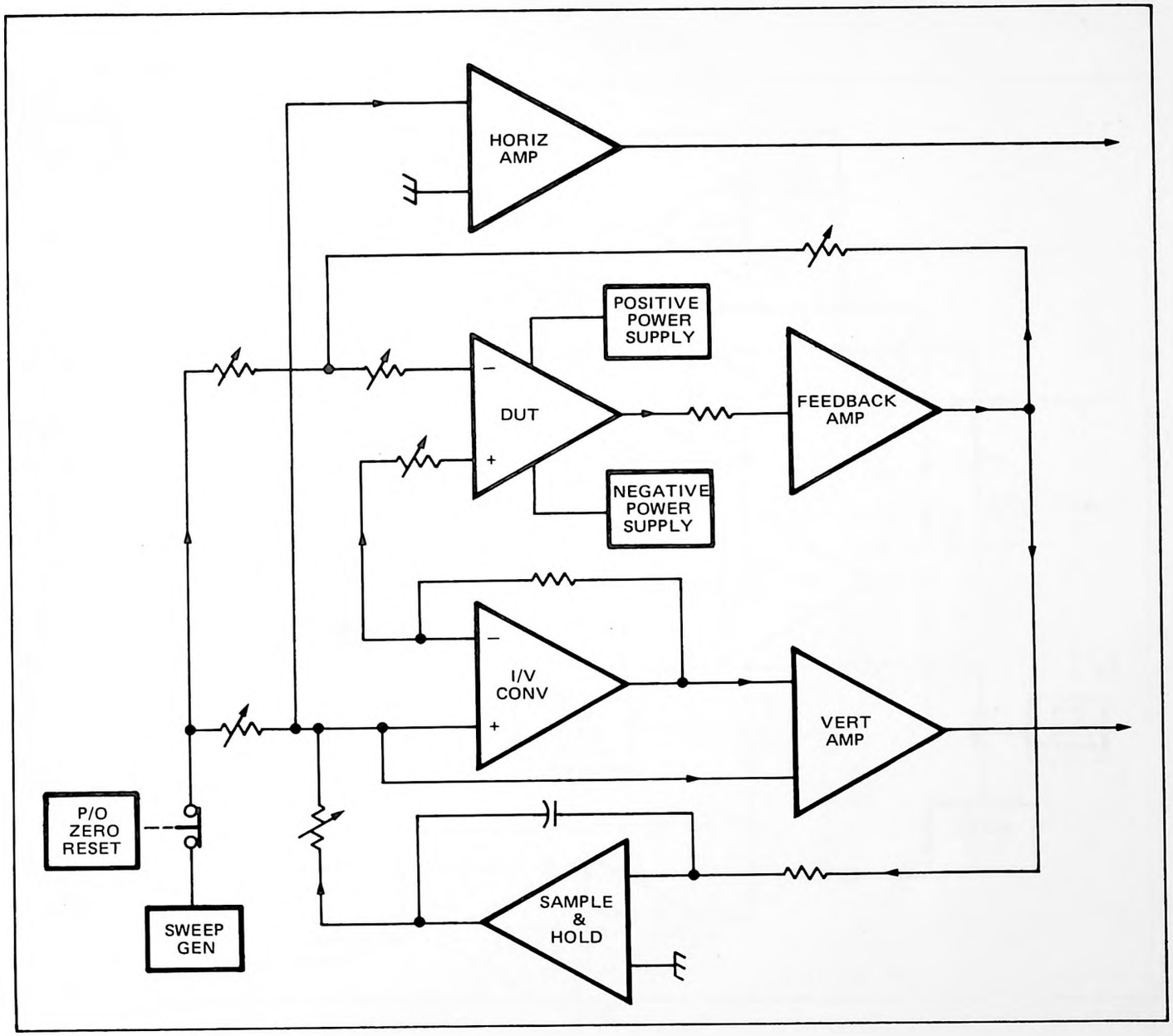

Fig. 3-2. Block diagram + INPUT I Configuration.

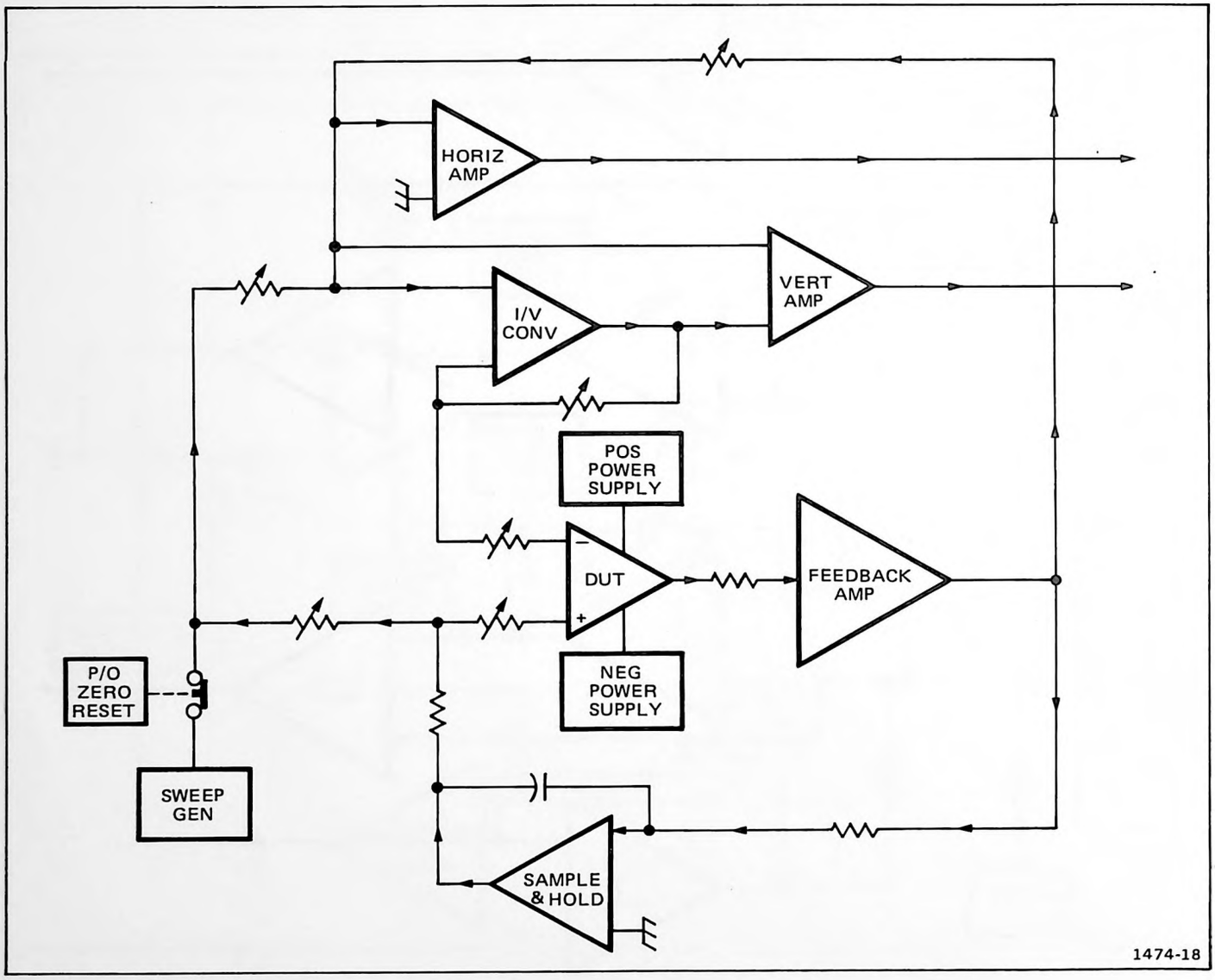

Fig. 3-3. Block diagram — INPUT I Configuration.

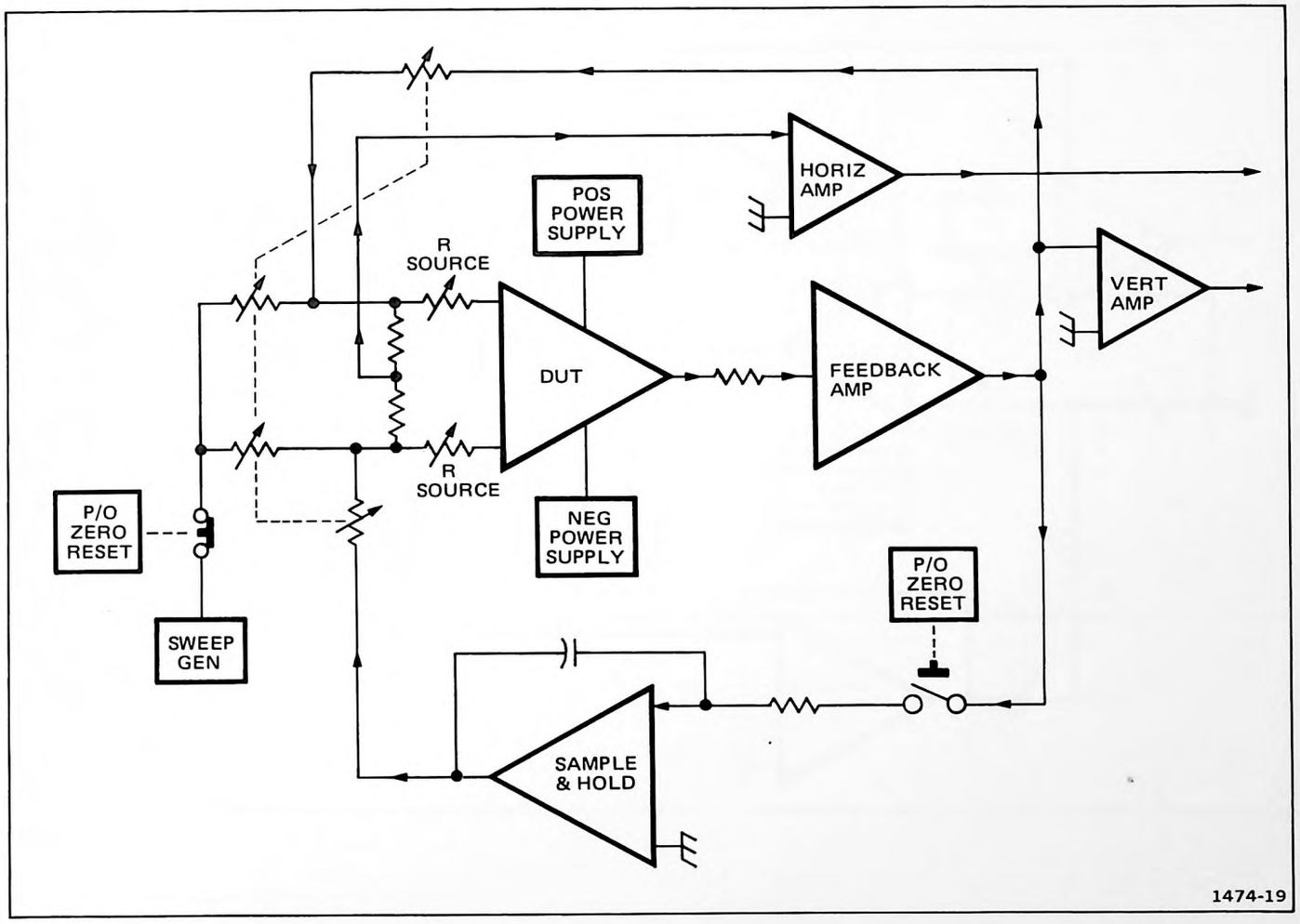

Fig. 3-4. Block diagram CMRR Configuration.

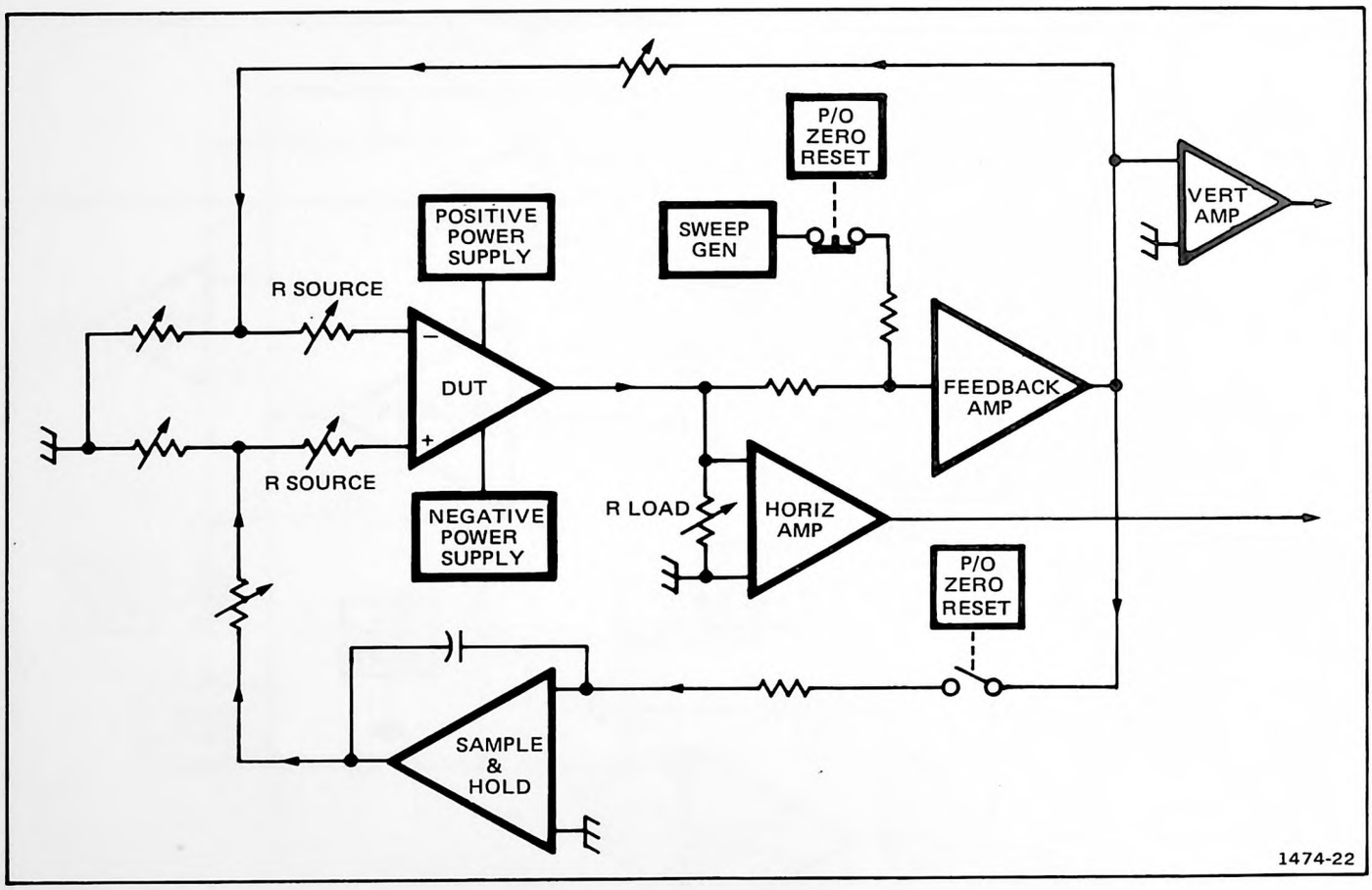

Fig. 3-5. Block diagram GAIN Configuration.

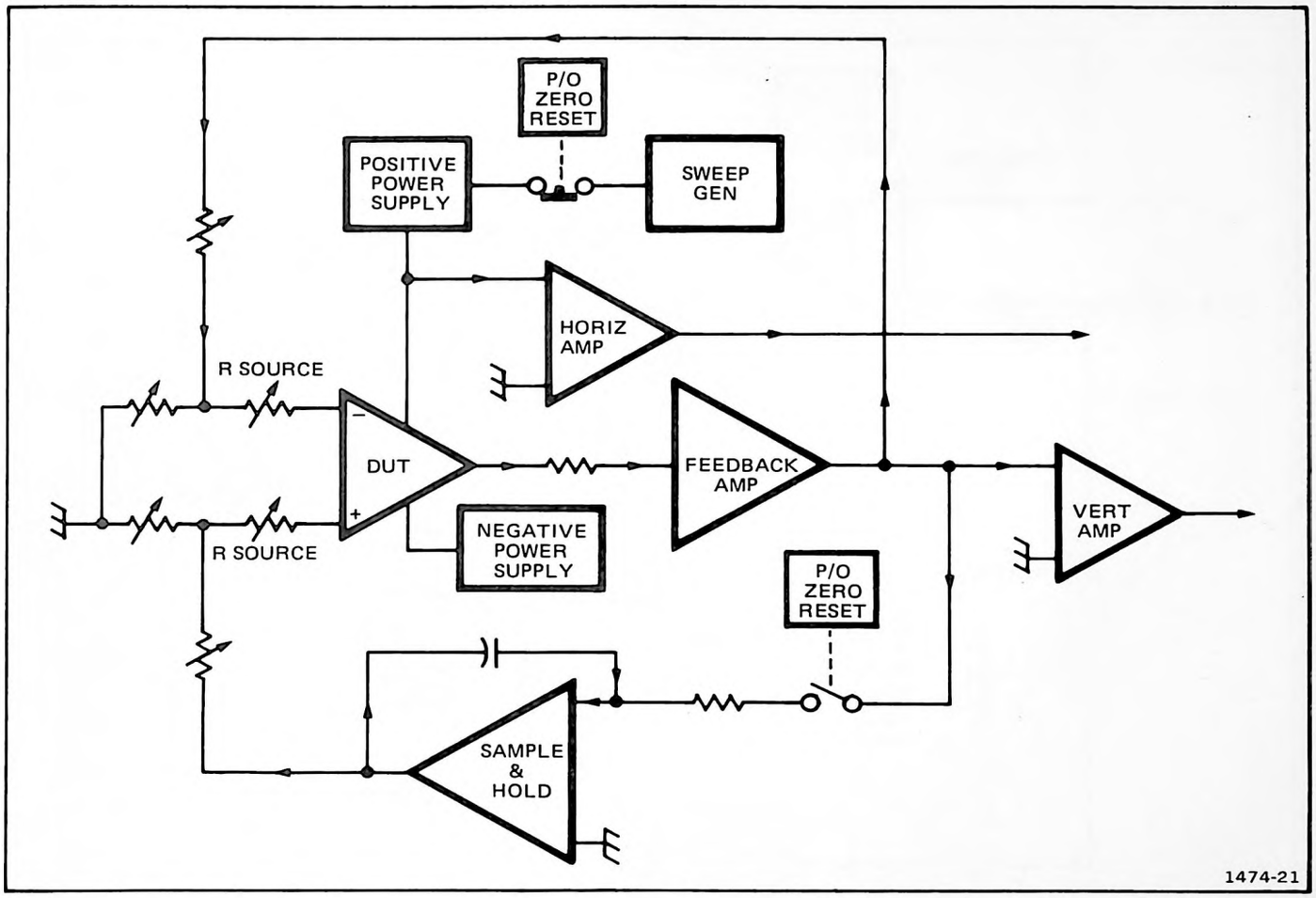

Fig. 3-6. Block diagram + PSRR Configuration.

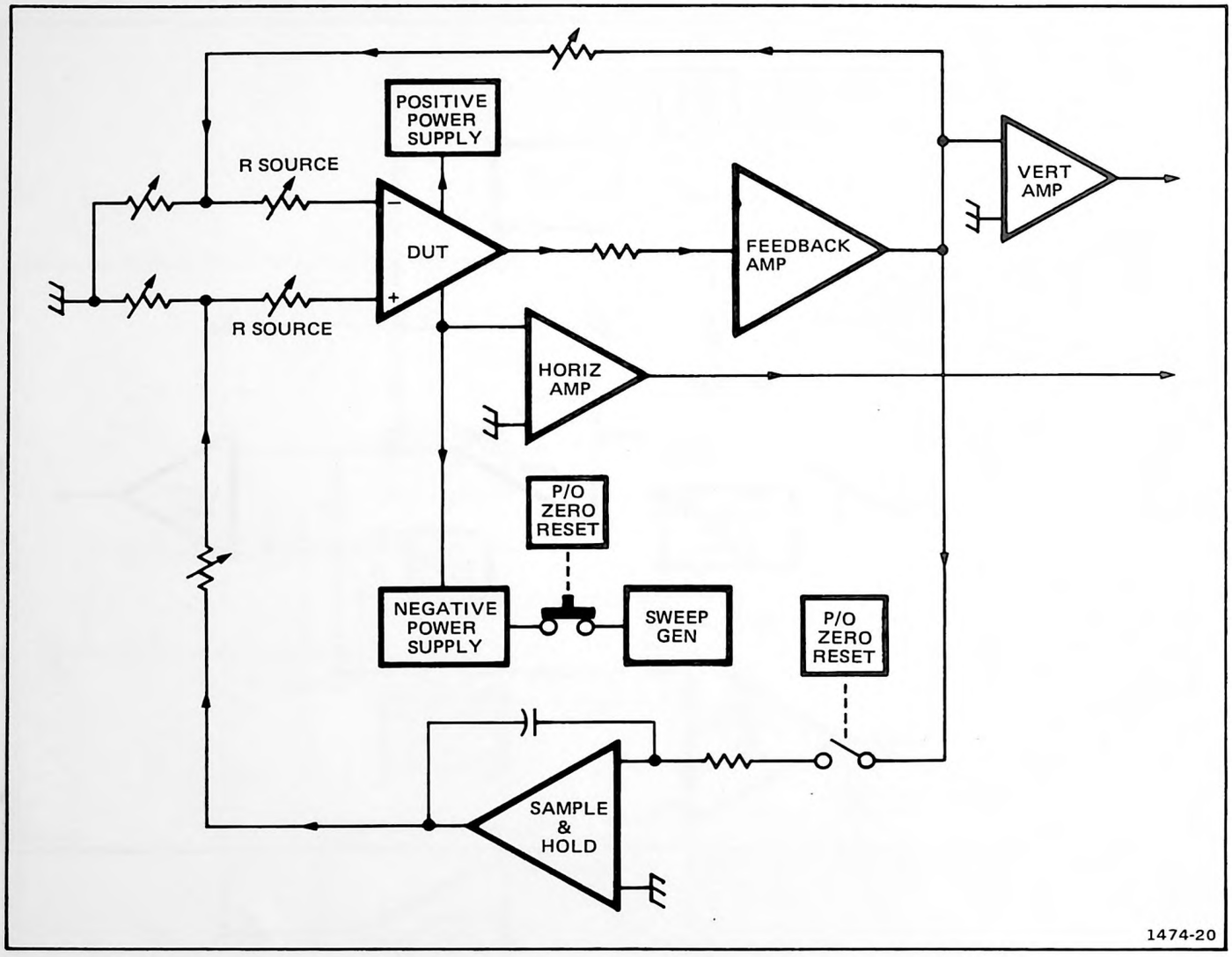

Fig. 3-7. Block diagram — PSRR Configuration.

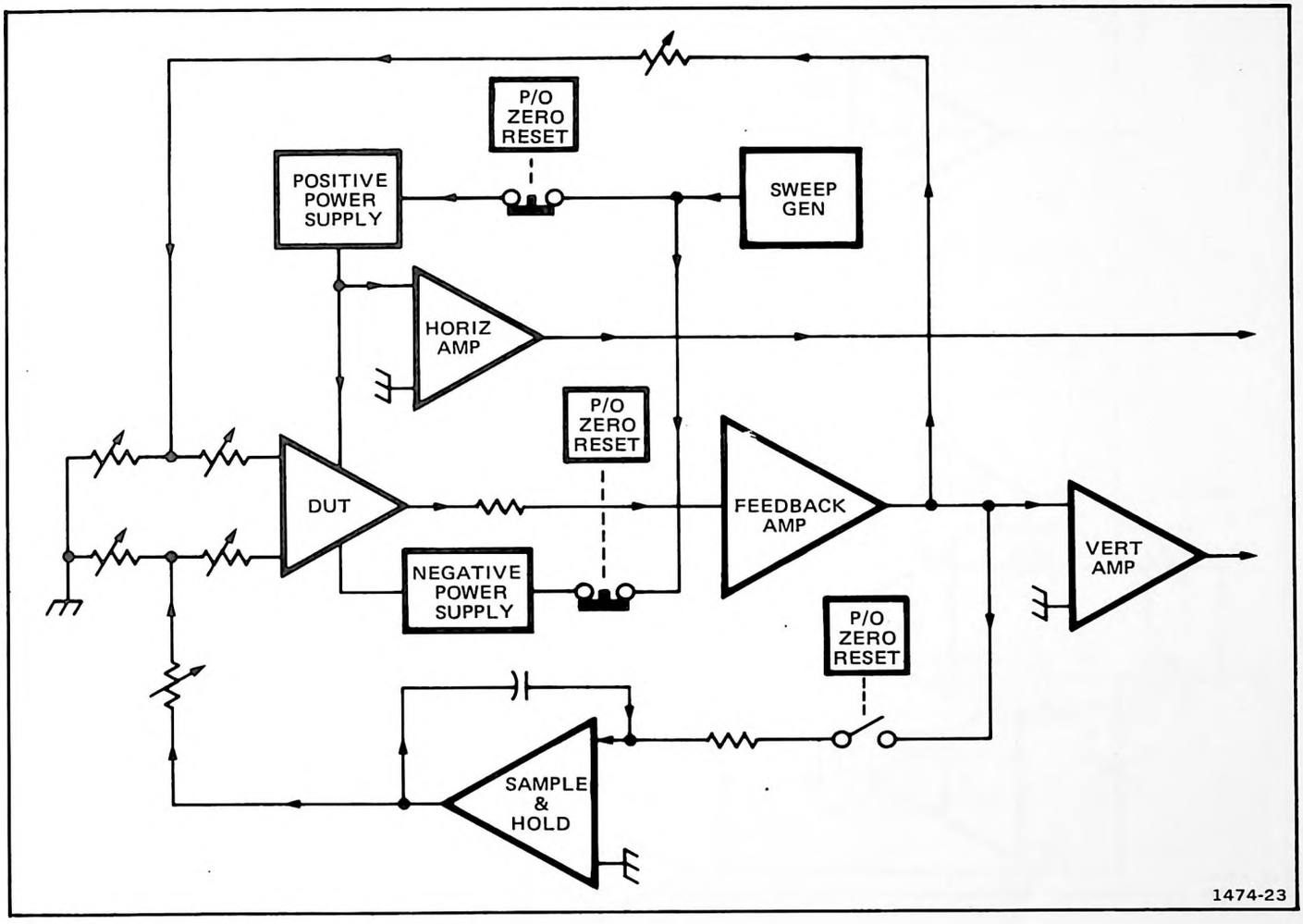

Fig. 3-8. Block diagram ± PSRR Configuration.

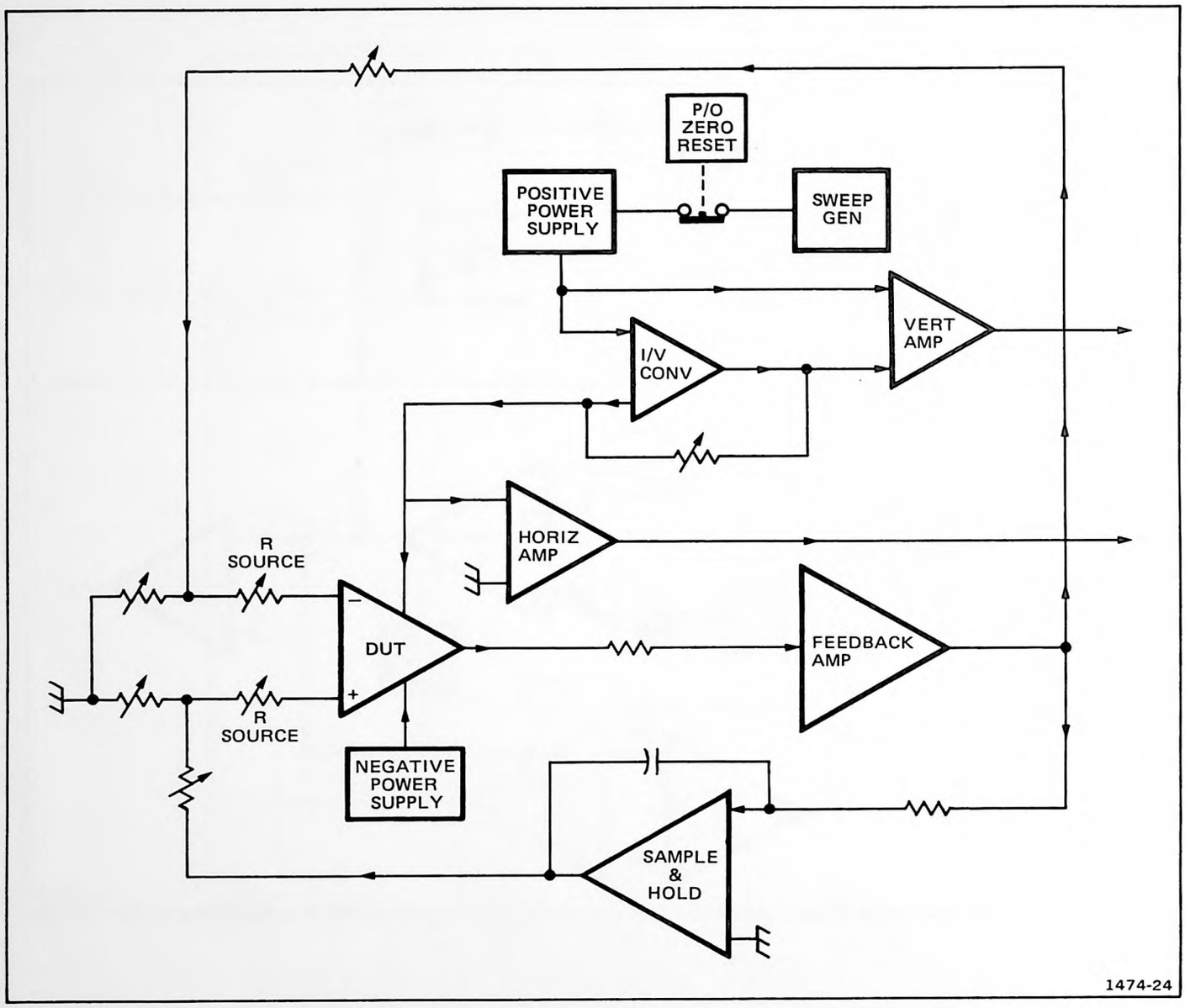

Fig. 3-9. Block diagram +SUPPLY I Configuration.

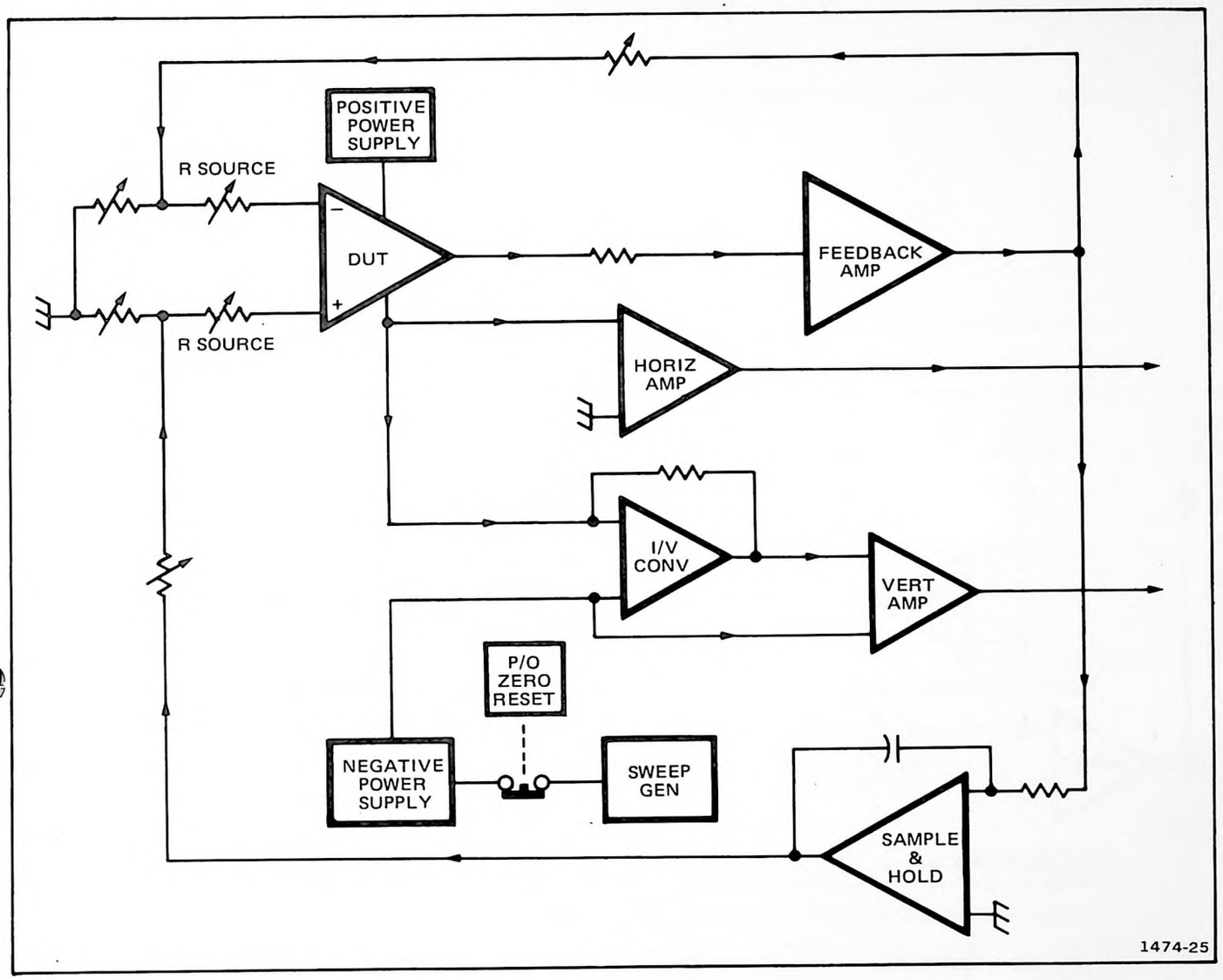

Fig. 3-10. Block diagram —Supply I Configuration.

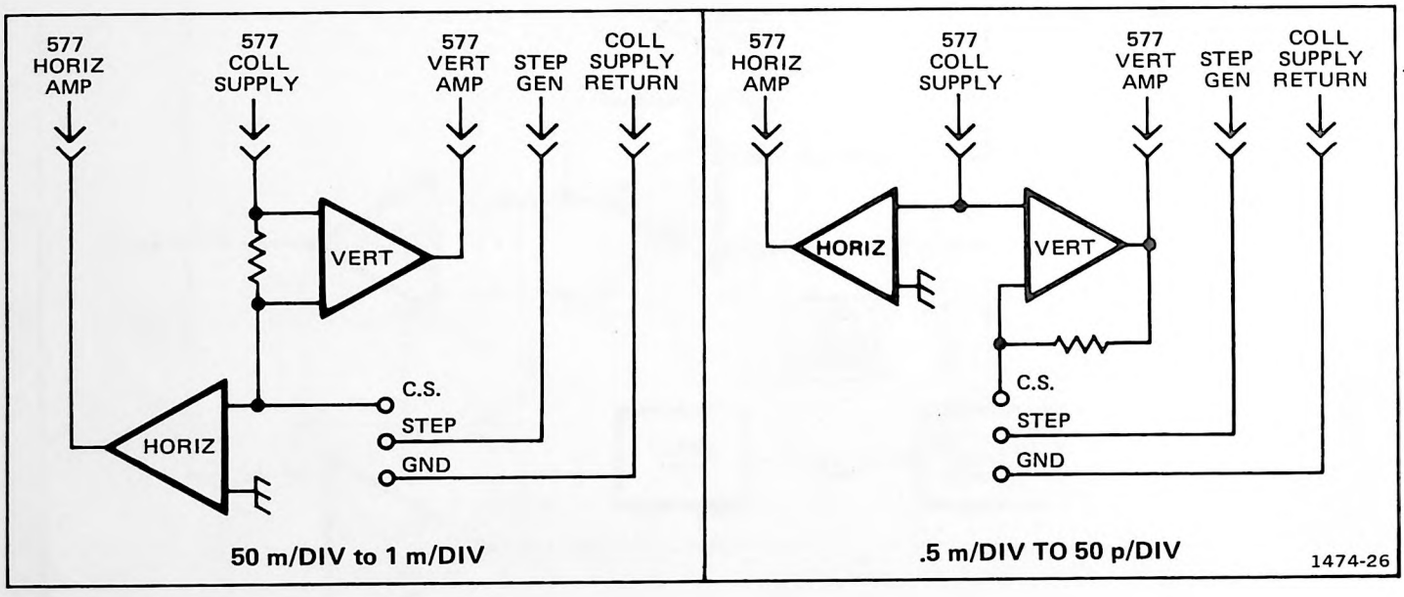

Fig. 3-11. Block diagram COLLECTOR I Configuration.

MAINTENANCE

Introduction

This section of the manual contains information for use in preventive and corrective maintenance, with some aids to troubleshooting.

PREVENTIVE MAINTENANCE

General

Preventive maintenance consists of cleaning, visual inspection, lubrication, etc. Preventive maintenance performed on a regular basis improves instrument reliability. The severity of the environment in which the instrument is used determines the frequency of maintenance.

Cleaning

The 178 Test Fixture should be cleaned as often as operating conditions require. Accumulation of dirt in the instrument can cause leakage current and component breakdown, especially in a humid atmosphere.

Exterior. Loose dust accumulated on the outside of the instrument can be removed with a soft cloth or a small paint brush. The paint brush is particularly useful for dislodging loose dust on and around the front-panel controls. Dirt that remains can be removed with a soft cloth dampened in a mild detergent and water solution. Abrasive cleaners should be avoided.

Interior. Dust in the interior of the instrument should be removed occasionally to prevent electrical conduction in high-humidity environments. Blow out accumulated dust using dry, low-velocity air. Remove any remaining dirt with a mild detergent and water solution. A cotton-tipped applicator is useful for cleaning circuit boards.

CAUTION

Avoid the use of chemical cleaning agents that might damage the plastics used in the instrument. Do not use chemicals that contain benzene, toluene, xylene, acetone, or similar solvents.

Lubrication

The reliability of potentiometers, rotary switches, and other moving parts can be maintained if they are kept properly lubricated. Use a cleaning-type lubricant (such as Tektronix Part No. 006-0442-00) on rotary switch contacts. Lubricate switch detents with heavier grease (such as Tektronix Part No. 006-0291-00). Do not lubricate cam switches.

NOTE

Shaft bushings of potentiometers that are not sealed should be lubricated with a lubricant (such as Tektronix Part No. 006-0172-00) that will not affect the electrical characteristics. Do not over-lubricate. A lubrication kit (Tektronix Part No. 003-0342-01) is available.

Visual Inspection

The 178 Test Fixture should be inspected occasionally for such defects as broken connections, loose pin connections, improperly seated transistors, damaged circuit boards and heat damaged parts.

The corrective procedure for most visible defects in obvious. However, particular care must be taken if heat damaged components are found. Overheating usually indicates other trouble in the instrument. It is, therefore, important that the cause of overheating be corrected to prevent recurrence of the damage.

Transistors and Integrated Circuits

Periodic checks of individual transistors and integrated circuits are not recommended. The best check is their operation in the equipment as reflected by performance. Sub-standard performance is normally detected during a performance check or calibration procedure.

Recalibration

To ensure accurate measurements, check the instrument calibration after each 1000 hours (approximately) of operation, or if the instrument is used infrequently, every year. Replacement of components may necessitate recalibration of the affected circuits. Complete calibration instructions are given in the Performance Check/Adjustment section. The Performance Check/Adjustment procedure can also be helpful in locating troubles.

TROUBLESHOOTING

Introduction

The following information is provided to facilitate troubleshooting the 178. Information contained in other sections of this manual should be used with the following information to aid in locating circuit defects (see Operating and Circuit Description sections).

Troubleshooting Equipment

The following equipment is useful for troubleshooting the 178.

1. Semiconductor Tester. Some means of testing the transistors, diodes, FETs, and linear op amps used in the instrument is helpful. A curve tracer, such as the Tektronix 575, 576, or 577-177 (577-178 for linear op amps) gives the most complete information.

2. DC Voltmeter and Ohmmeter. A voltmeter for checking circuit voltages and an ohmmeter for checking resistances and diodes are required. For most applications, a 20,000 ohms/volt VOM can be used if allowances are made for circuit loading when measuring voltage at high impedance points.

3. Test Oscilloscope. An oscilloscope with a DC to 10 MHz bandwidth and 10 mV/Div to 10 V/Div vertical deflection factor is suggested. A 10X probe should be used to reduce circuit loading.

Troubleshooting Aids

Diagrams. Circuit diagrams are located on foldout pages in the Diagrams section near the rear of the manual. The component number and electrical value of each component is shown. See the first page of the Diagrams section for definition of the symbols used to indentify components.

The circuit configuration for each FUNCTION switch position is shown in the series of block diagrams, Figures 3-1 through 3-11 (Circuit Description section).

An overall block diagram (SWITCH CONFIG BLOCK DIAGRAM) is provided in the DIAGRAMS section preceding the FUNCTION/VERTICAL SWITCHES diagram (number 3). This block relates the circuits to the FUNCTION and VERT UNITS/DIV switch contact numbers.

Switch Wafer Identification. Rotary switch wafers shown on the diagrams are coded to indicate the position of each wafer in the switch assembly. The number portion of the code is the wafer number, counting from the mounting end of the switch. The letters F and R indicate whether the front or rear of the wafer performs the switching function. For example, a wafer designated 2R indicates the rear of the second wafer.

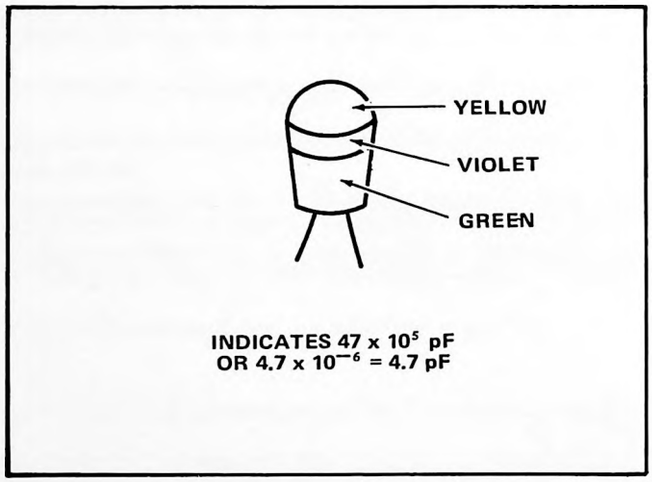

Fig. 4-1. Electrolytic capacitor color code.

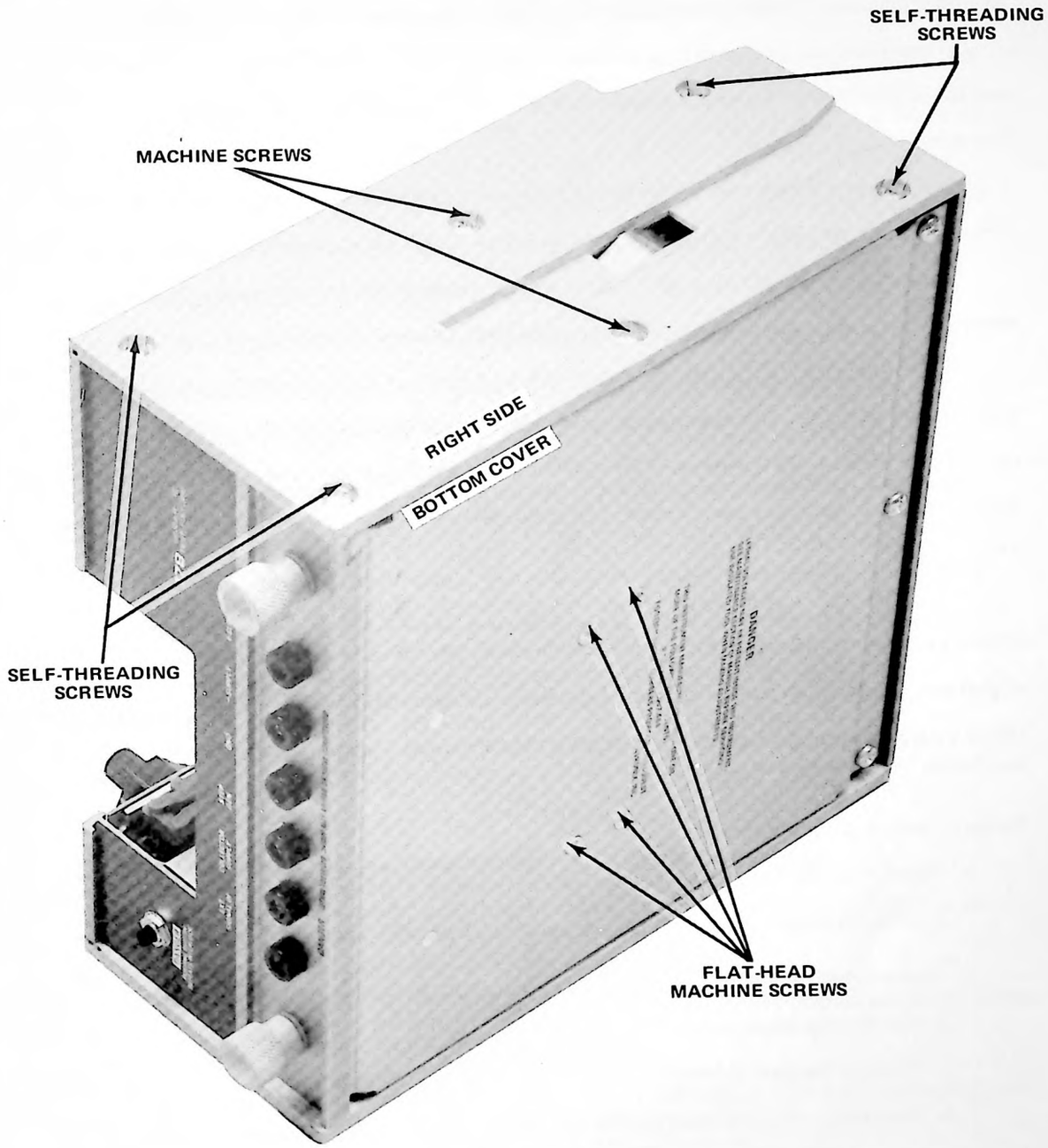

Fig. 4-2. Right-side and bottom panel of the 178.

Circuit Description. The Circuit Description, Section 3, contains a brief description of the theory of circuit operation. Refer to the schematic diagrams in the pullout DIAGRAMS section.

Transistors and Integrated Circuit Lead Configurations. The lead configurations of the transistors and ICs in the 178 Test Fixture are shown with the circuit board photos on the schematic diagram fold-out aprons.

Voltages and Waveforms. Important voltages and waveforms are shown in blue on the diagrams. The portions of the circuits that are mounted on circuit boards are enclosed by blue lines or boxes.

Capacitor Values. Values of disc capacitors are marked on the capacitor body and electrolytic capacitor values are marked either on the capacitor body or are color coded (see Fig. 4-1).

Diode Color Code. The cathode end of each glass enclosed diode is indicated by a stripe, a series of stripes, or a dot. For diodes using a series of stripes, the color code identifies either the Tektronix part number of the JEDEC number. This code follows the standard color code except that a pink first band indicates a Tektronix part number, i.e., pink-brown-gray-green, indicates Tektronix Part No. 152-0185-00.

Circuit Boards. A photograph of each circuit board, with circuit components identified, is included adjacent to the schematic diagram relating most directly to the circuit board. Some board photos may be placed on the back of the preceding circuit diagram. Each circuit board photo is sectioned by a grid system to facilitate rapid location of components by component number.

Access to Circuit Boards in the 178

1. Remove the side panels.
   a. Remove the six screws on each side (note the two screw types: self-threading and machine).
2. Remove the bottom panel.
   a. Remove the three pan-head machine screws from the bottom panel (see Fig. 4-2).
   b. Remove the four flat-head machine screws from the bottom panel.
   c. Remove the two pan-head machine screws from inside the storage compartment (see Fig. 4-3).
   d. Remove the two shields that form the side of the storage compartment. See Fig. 4-3. (The front shield, held in place with two hex nuts, Fig. 4-3, need not be removed).
   e. Remove the three pan-head machine screws (see Fig. 4-2) from the bottom panel.
   f. Remove the bottom panel.

Removing the Vertical Preamplifier and Feedback Amplifier Boards from the 178

1. Remove the Power Supply circuit board as follows:

a. Remove the eleven multi-pin connectors from the Power Supply circuit board. See Fig. 4-5 for circuit-board location.

NOTE

The last digit in the number of the circuit-board to which the multi-pin connector is mated indicates the color of the connector body. The standard color code is used. Therefore, the connector body color for P473 is orange. An arrow on the circuit board indicates pin number one on the board. Pin number one is marked with an arrow on the plug. Align the arrows for correct position.

b. Remove the red connector (P222) from the rear of the Feedback Amp board. Lift the pair of wires (attached to the red connector) away from the Power Supply circuit board.

c. Remove the three round-head machine screws from the top-rear of the instrument (Fig. 4-4).

d. Slide the Power Supply circuit board and rear-panel assembly away from the instrument far enough to unsolder the two black panel-lamp leads.

e. Remove the circuit board and rear-panel assembly.

2. Remove the Vertical Preamp, Feedback Amp, and Interface Boards (remove as a unit) as follows:

a. Remove the six multi-pin connectors (color coded as previously detailed).

b. Lift the three-lamp holder caps away from the plastic sleeves (see Fig. 4-6).

c. Note the positions of the VERT UNITS/DIV and FUNCTION switches and remove the switch knobs.

d. Note the positions of the SOURCE RESISTANCE and LOAD RESISTANCE knobs and remove the knobs.

e. Remove the hex nut and washer from the SOURCE RESISTANCE, LOAD RESISTANCE, and FUNCTION switch shafts.

f. Remove the four flat-head screws (visible through the front-panel openings, see Fig. 4-7) at the VERT UNITS/DIV and FUNCTION switches.

g. Loosen the socket-head screw from the DUT SUPPLIES switch arm (see Fig. 4-8).

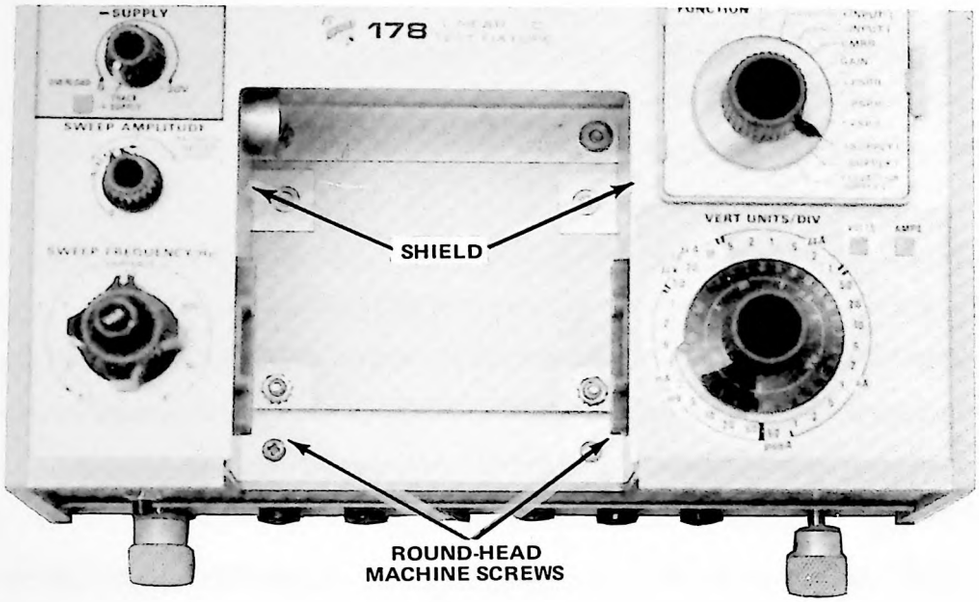

Fig. 4-3. Top view of the 178 showing storage-compartment shields.

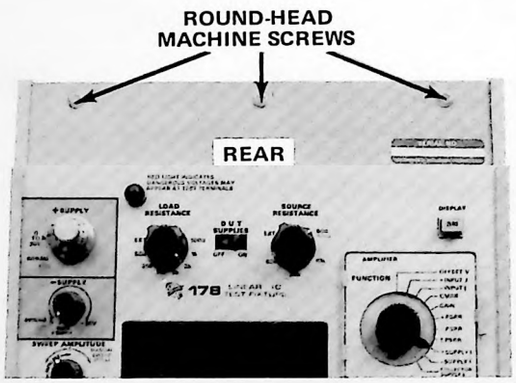

Fig. 4-4. Top view of the 178.

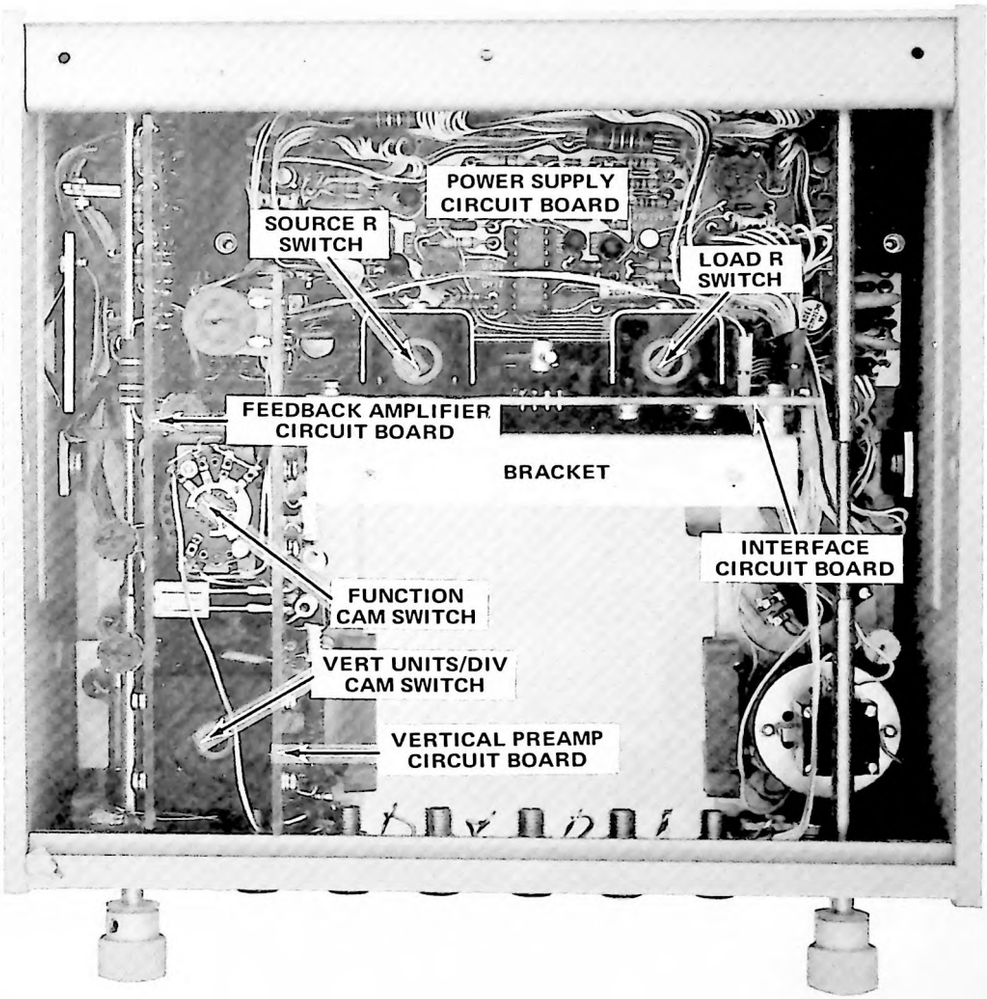

Fig. 4-5. Location of circuit boards in the 178.

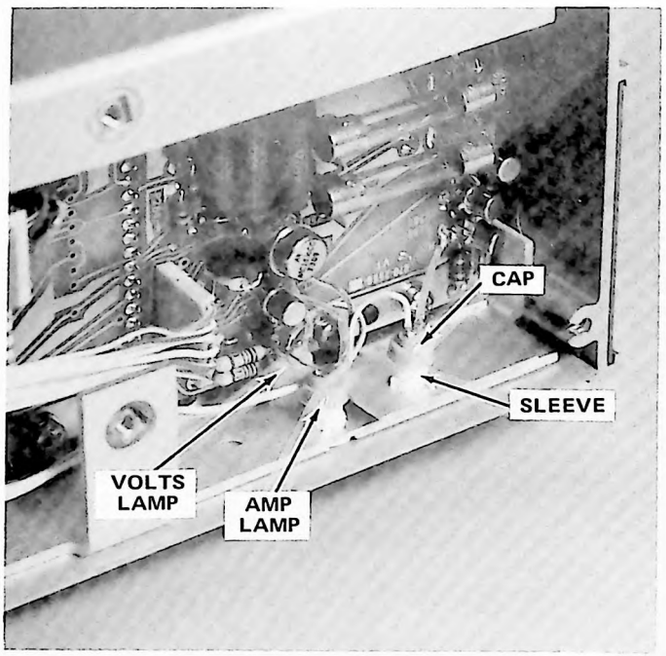

Fig. 4-6. Location and assembly details of indicator lamps.

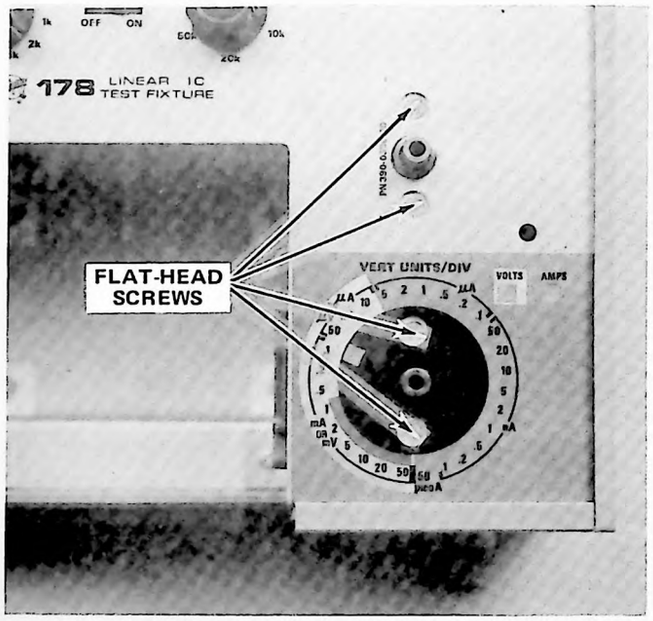

Fig. 4-7. Location of the flat-head machine screws under FUNCTION and VERT UNITS/DIV switches.

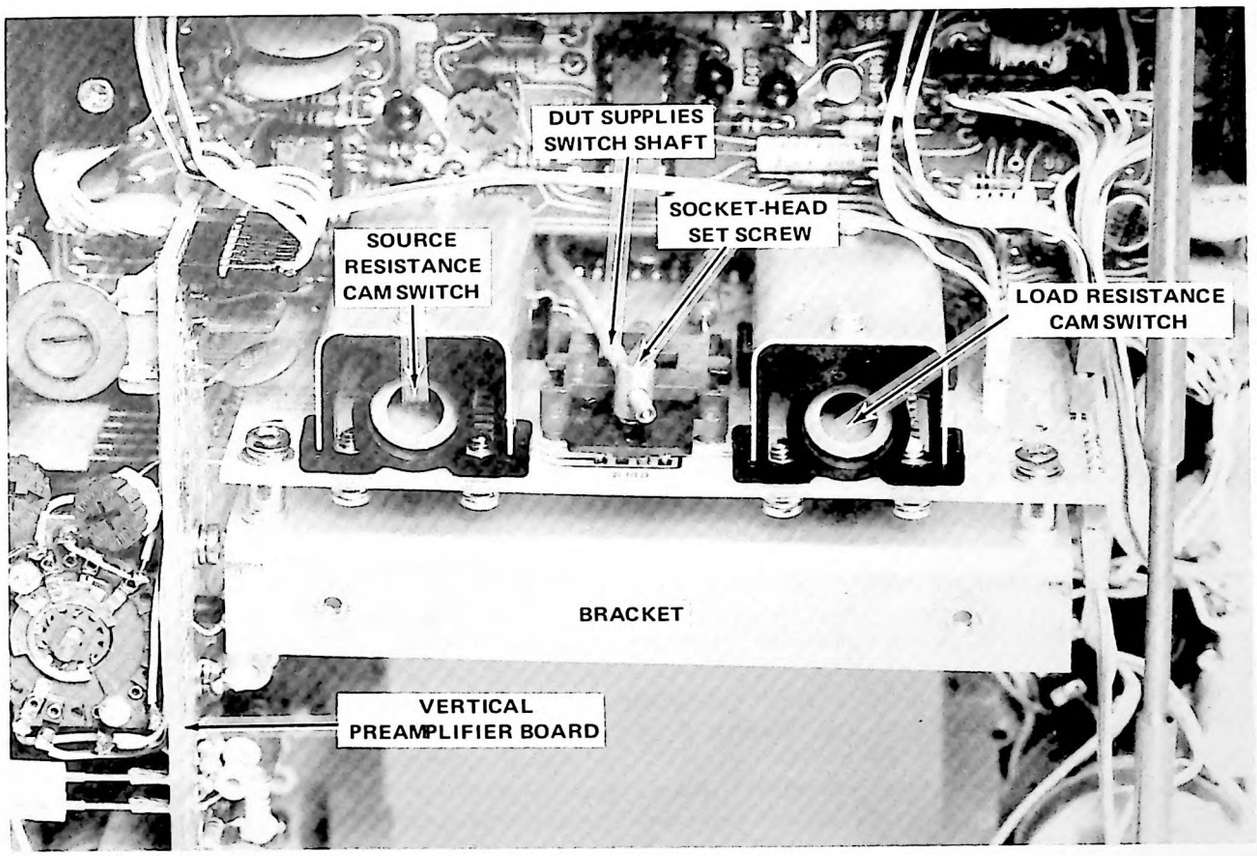

Fig. 4-8. Location of the DUT SUPPLIES switch arm.

h. Remove the three multi-pin connectors from the Interface circuit board.

i. Remove the DUT card-grounding clip (see Fig. 4-9).

j. Remove the two hex nuts (that hold the bracket to the main chassis) near the 60-pin interface connector.

k. Lift the Vertical Preamp, Feedback Amp, and Interface circuit boards away from the instrument, as a unit.

l. Separate the two board assemblies lying at right angles by pulling the Interface board away from the double-board assembly.

Removing and Replacing the Feedback and Vert Preamp Boards from the Cam-Switch Assembly

If the two boards (Feedback Amplifier and Vertical Preamp) common to the FUNCTION and VERT UNITS/DIV switches must be separated, remove only one board at a time from the cam switch drum-and-bearing assembly. The drum-and-bearing assembly is precisely aligned at the factory. If both boards are removed from this assembly, the alignment is destroyed. If both boards must be removed, do not disassemble until the replacement boards are obtained. Replace one board at a time to preserve the alignment.

Removing and Replacing the Cam Switch Assembly

If the cam in the cam-switch drum-and-bearing assembly must be replaced, do not remove the assembly from the circuit boards until the replacement cam assembly is obtained.

An alignment fixture and installation instructions are included with the replacement cam assembly.

Removal of Storage Compartment Shields

Preliminary

1. Remove the two flat-head machine screws (Fig. 4-10) from the bottom panel.

2. Remove the two round-head machine screws (Fig. 4-11) at the front of the storage compartment.

Removal-Right Shield

1. Press lightly at the point on the shield indicated in Fig. 4-12.

2. Grasp the upper-right corner of the shield and tilt the top of the shield toward the center of the instrument while lifting the shield upward.

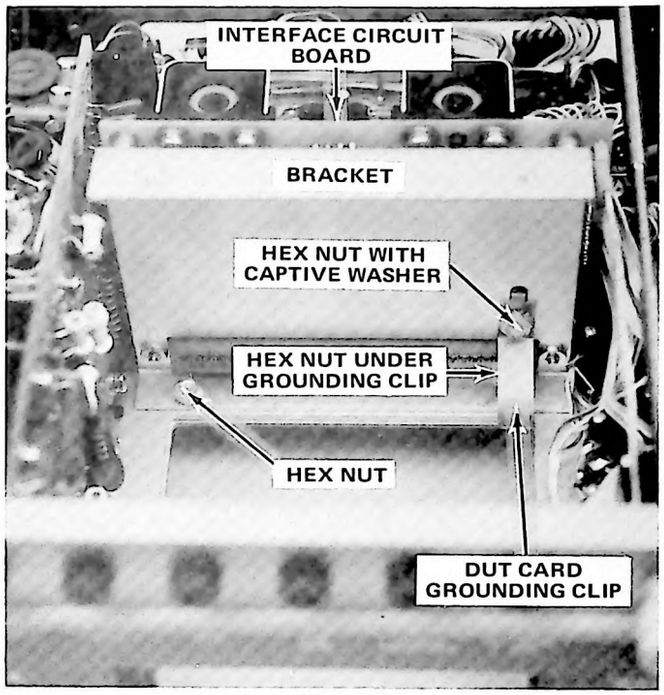

Fig. 4-9. Location of the DUT card grounding clip.

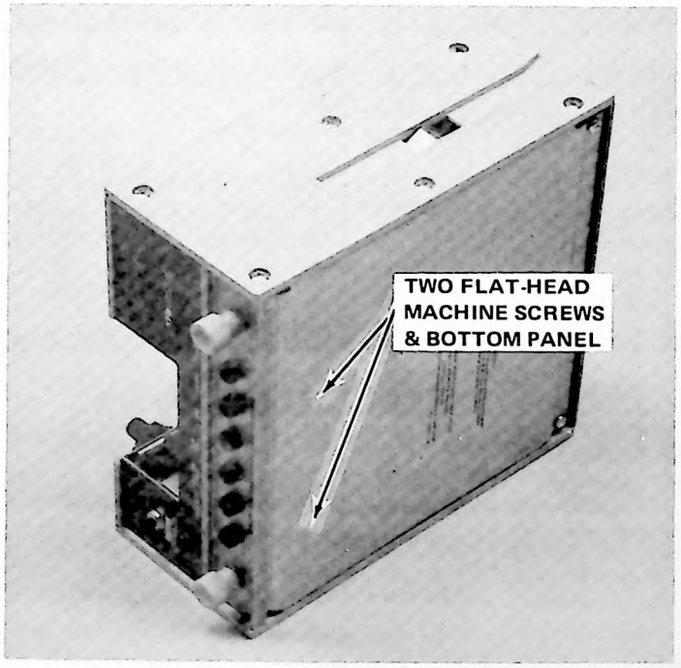

Fig. 4-10. Location of the screws securing the storage compartment shields.

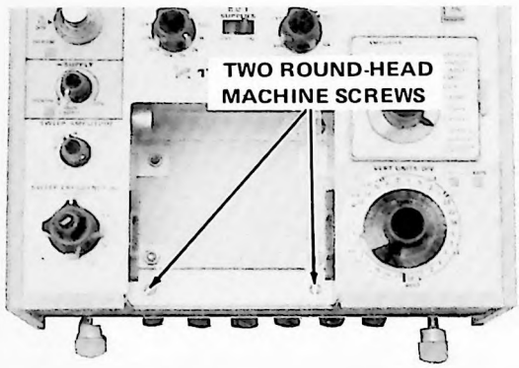

Fig. 4-11. Location of the screws in the storage compartment.

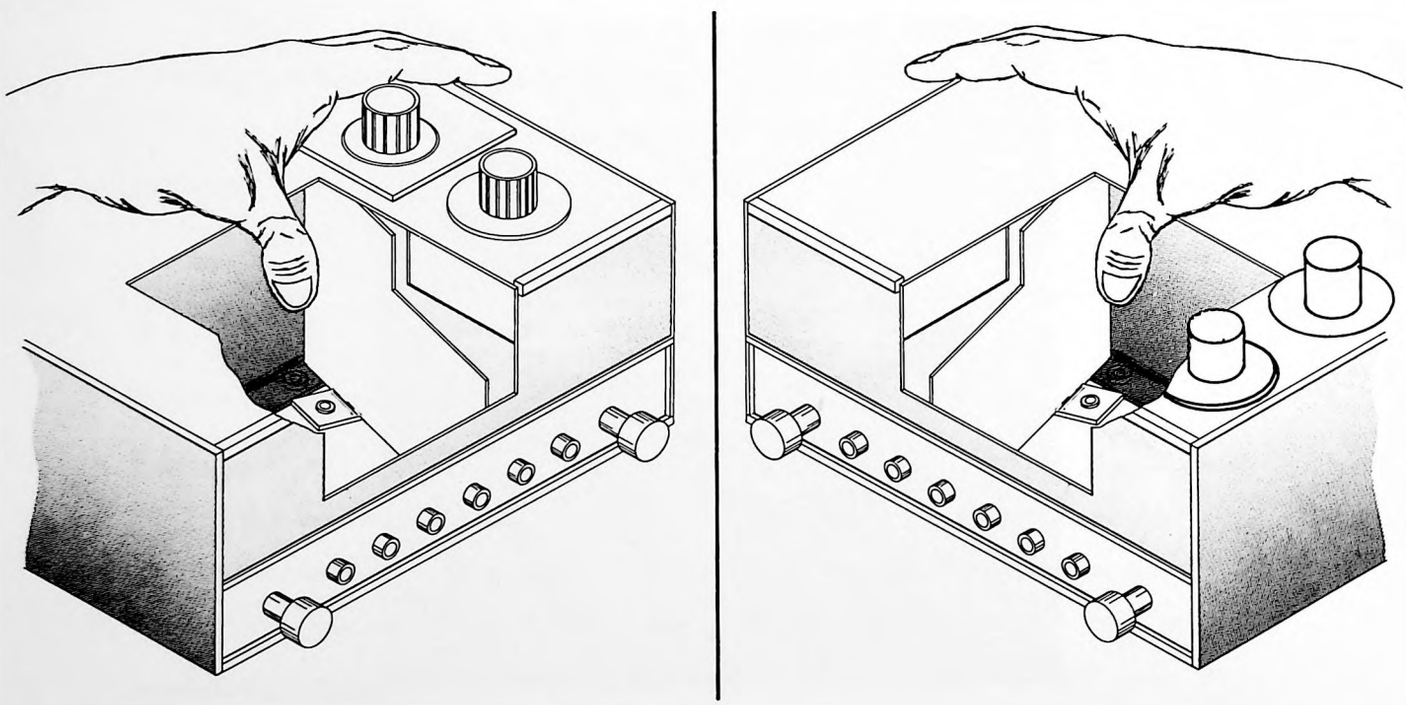

Fig. 4-12. Removing the storage compartment shields.

3. When the bottom of the shield clears the hex nut on the bottom panel, swing the front of the shield toward the instrument center, and lift the shield away from the instrument.

Removal-Left Shield

1. Press lightly at the point on the shield indicated in Fig. 4-12.

2. Grasp the upper-left corner of the shield and tilt the top of the shield slightly toward the instrument center while lifting the shield to clear the hex nut on the bottom panel.

3. Swing the front of the shield toward the center while pulling forward on the shield, until the shield clears the grounding clip (Fig. 4-12).

4. Lift the shield from the instrument.

Replacement of Storage Compartment Shield-Left Side

1. Place the shield in the instrument as shown in Fig. 4-13, with the back edge to the left of the grounding clip.

2. Tilt the top of the shield slightly toward the instrument center, while swinging the front of the shield toward its final position.

3. When the bottom of the shield clears the hex nut on the bottom panel, slide the shield into position and place the round-head machine screw through the front tab, but do not tighten.

4. Replace the flat-head screw through the bottom panel into the shield and tighten. Tighten the round-head machine screw at the front of the compartment.

Replacement of Storage Compartment Shield-Right Side

1. Place the shield into the compartment as shown in Fig. 4-13.

2. Grasp the upper-left corner of the shield and tilt the top of the shield slightly toward the instrument center.

3. Keeping the shield tilted, swing the front end of the shield toward its final position, lifting slightly to clear the hex nut on the bottom panel.

4. Place the round-head screw through the front tab, Fig. 4-13, but do not tighten.

5. Replace the flat-head machine screw through the bottom panel into the shield and tighten. Tighten the round-head machine screw at the front of the compartment.

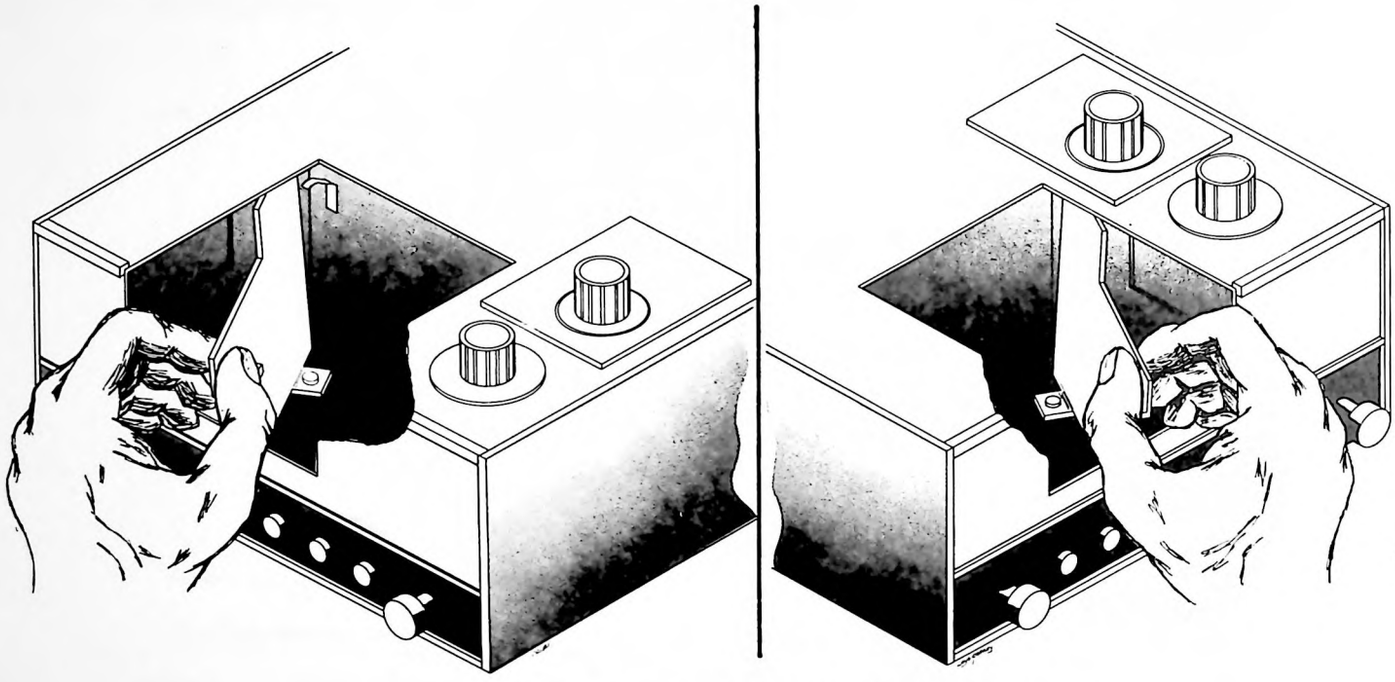

Fig. 4-13. Replacement of the storage compartment shields.

PERFORMANCE CHECK/ADJUSTMENT PROCEDURE

Introduction

This section of the manual contains separate check and adjustment procedures. The Check procedure is provided to check the instrument operation against the instrument specifications. The adjustment procedure returns the circuitry to within the design capabilities. Adjustment is generally required after a repair has been made, or after a long time interval in which normal aging of components may affect instrument accuracy.

For initial inspection, using the check procedure, the right-side panel should be removed.

Services Available

Tektronix, Inc. provides complete instrument repair and calibration service at local field service centers and field offices. Contact your local Tektronix Field Office or representative for further information.

Test Equipment Required

The following test equipment, or equivalent, is required for complete check and adjustment of the 178 Linear IC Test Fixture. All test equipment is assumed to be correctly calibrated and operating within the listed specifications.

1. Digital Ohmmeter or Resistance Bridge. Range, 50 Ω through 50 kΩ; accuracy, 0.l%.

2. Differential dc Voltmeter. Input resistance, 1000 MΩ[1]; range, through 4 volts; accuracy, 0.l%. A digital voltmeter may be used for some of the measurements in these procedures. Use the differential voltmeter where indicated.

3. Test Oscilloscope. Dual Input, dc coupled; Time/Div, .1 ms through 1 s; Deflection factor, from .5 V/Div. (10 μV/Div, differential input, for CMRR test method 3, optional).

4. Time Mark Generator. Markers at 1 ms, .1 s, 1 s, and 5 s. The Tektronix 184 or 2901 Time Mark Generator is recommended.

5. Test Op Amp. CMRR 150 dB specified minimum or 120 dB measured; noise level less than 2 μV with 50 Ω source resistance. Precision Monolithics SS725 meets the 120 dB requirement. See CMRR test method 1 in the procedure.

[1] See footnote 1, Step 5, Check Vertical Current-Mode Accuracy.

Or, CMRR 110 dB specified minimum; noise level less than 2 μV with 50 Ω source resistance; any op amp meeting or exceeding 114 dB, measured, may be used. The Precision Monolithic OP-05EJ is recommended. See CMRR test method 2 in the procedure.

6. Two 741 IC operational amplifiers. One is supplied as a standard accessory.

7. Resistor Kit (Tektronix Calibration Fixture 067-0691-00). Same as the calibration resistor kit for the 177.

1-1 Ω, 3 W, 1/4%	1-10 kΩ, 1/4 W, 1/4%
1-10 Ω, 3W, 1/4%	1-100 kΩ, 1/8 W, 1/4%
1-100 Ω, 1/2 W, 1/4%	1-1 MΩ, 1/8 W, 1/4%
2-200 Ω, 10 W, 1%	1-10 MΩ, 1/8 W, 1/4%
1-1 kΩ. 1/4 W, 1/4%	

Order if needed, for the 178, one-100 MΩ, 1 W, 1/4% resistor (Tektronix Calibration Fixture 067-0705-00).

8. Capacitor. 0.22 μF, 50 volts.

9. Other components, for building CMRR test circuit for method 2:

2-50 kΩ, 1/4%	1-10 kΩ potentiometer
1-40.2 kΩ, 1%	2-10-volt zener diodes
2-1.5 kΩ, 5%	

10. Extender cable (to permit making adjustments to the 178 without removing the 577 bottom panel). Tektronix Part No. 067-0721-00.

PERFORMANCE CHECK

1. Check Source Resistance Accuracy

a. With the 178 removed from the 577, set the 178 controls as follows:

FUNCTION	OFFSET V
VERT UNITS/DIV	1 m
SOURCE RESISTANCE	50 Ω

b. Connect an ohmmeter or resistance bridge (accuracy .1%) between the +IN and GND terminals on the Standard Op Amp DUT card. Set the SOURCE RESISTANCE and VERT UNITS/DIV switches to the first settings in Table 5-1.

c. CHECK — The resistance and tolerance should be as shown in the table.

d. Switch to the next settings in Table 5-1.

e. CHECK — The resistance value for each of the SOURCE RESISTANCE and VERT UNITS/DIV setting should be within the tolerances shown.

TABLE 5-1

SOURCE RESISTANCE	VERT UNITS/DIV[1]	Ohmmeter Reading	Tolerance
50 Ω	1 m	550 Ω	Check for approx value only[2]
50 Ω	.5 m	50 Ω	
10 k	.5 m	10 kΩ	± 1%
20 k	.5 m	20 kΩ	± 1%
50 k	.5 m	50 kΩ	± 1%

If a more accurate measurement is required, use the following method:

Connect the points on the DUT card, shown in Fig. 5-1, to GND and slide the Ext Feedback Amp switch away from the NORM position. Measure the resistance as in parts b through e. Return the slide switch to NORM and remove the connecting leads.

f. Connect the ohmmeter or resistance bridge between -IN and GND on the Op Amp card and repeat steps a through e.

g. Connect the ohmmeter between -IN and the left -R_S EXT terminal. Set the SOURCE RESISTANCE switch to EXT.

h. CHECK — The meter should indicate a short circuit.

i. Connect the ohmmeter between GND and the right -R_S EXT terminal.

j. CHECK — The ohmmeter should indicate approximately 50 Ω.

k. Connect the ohmmeter between GND and the right + R_S EXT terminal.

l. CHECK — The ohmmeter should indicate approximately 50 Ω.

m. Connect the ohmmeter between +IN and the left +R_S EXT terminal.

n. CHECK — The ohmmeter should indicate a short circuit.

2. Check Load Resistance Accuracy
   a. Set the controls as follows:

577	
POWER	in (off)
178	
FUNCTION	OFFSET V
LOAD RESISTANCE	100 Ω
SWEEP AMPLITUDE	
+ SUPPLY	0.0 (zero)
— SUPPLY	Track + Supply

[1] When the VERT UNITS/DIV switch is in the 1 m/DIV to 50 m/DIV positions, add 500 Ω to the SOURCE RESISTANCE indicated.

[2] The measured resistance varies, depending upon the ohmmeter and resistance range used, because of the Source Resistance protection circuit in the 178. Use the highest range possible consistent with good resolution.

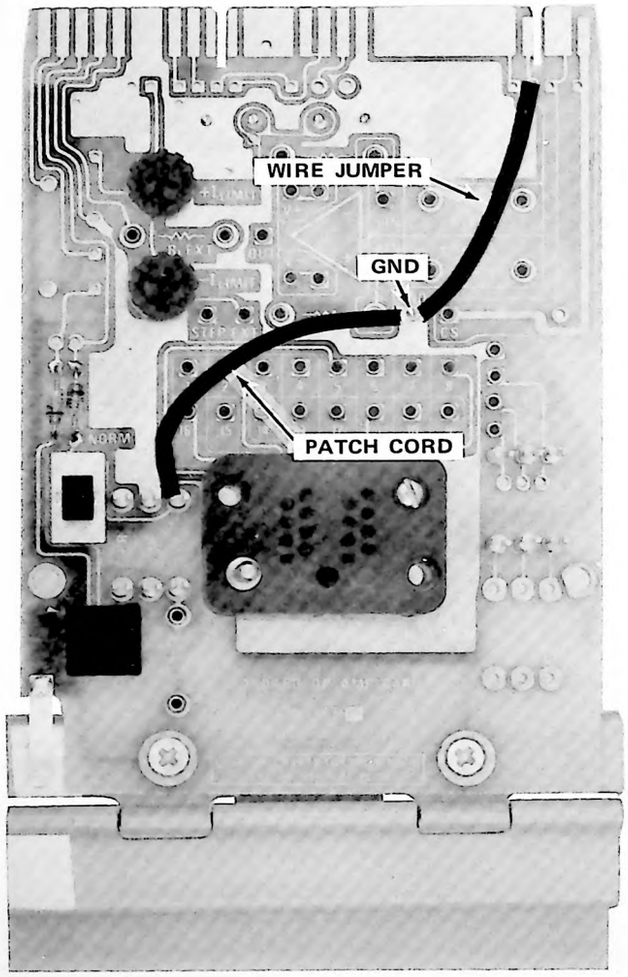

Fig. 5-1. See Table 5-1, footnote 2.

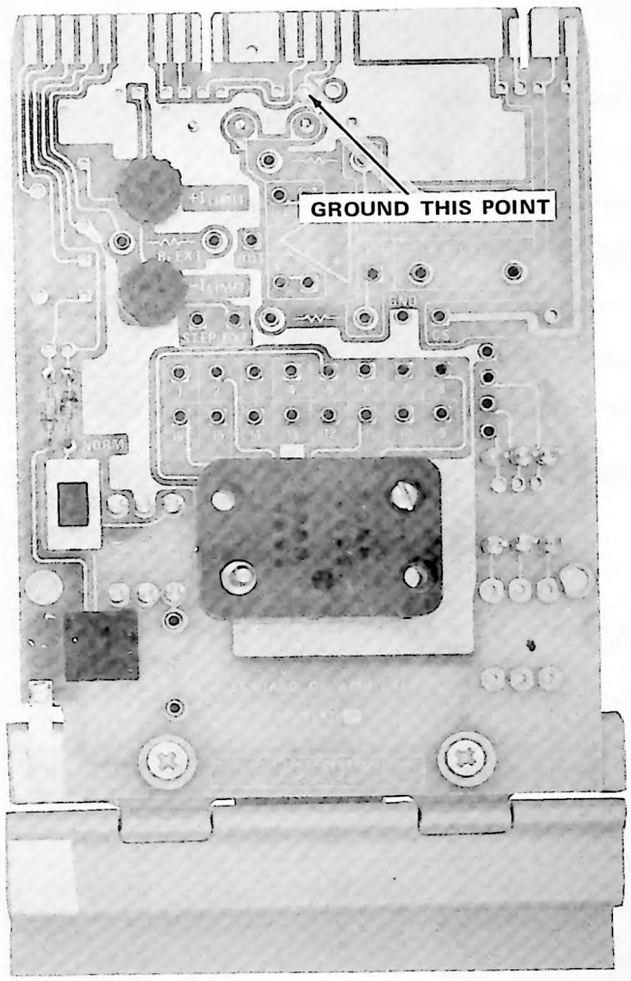

Fig. 5-2. Location of the point to be grounded in Step 2, part B.

b. Connect a lead from GND to the sixth hole to the left from the upper-right corner of the Standard Op Amp card. See Fig. 5-2.

NOTE

Grounding this point permits measuring these resistors without removing the right-side cover. The resistance measured is higher (on the higher ranges) than indicated on the LOAD RESISTANCE switch. This difference is reflected in Table 5-2.

c. Place the Standard Op Amp card in the 178 and plug the 178 into the 577. Pull the 577 POWER switch to the on position.

d. Connect the ohmmeter between GND and OUT on the DUT card.

e. Switch the FUNCTION switch to each of its positions.

f. CHECK — The meter reads 100 Ω only on the OFFSET V and GAIN positions. All other positions should read approximately 50 kΩ.

g. Return the FUNCTION switch to OFFSET V.

h. CHECK — Using Table 5-2, read the value of resistance for each setting of the LOAD RESISTANCE switch.

TABLE 5-2

LOAD RESISTANCE Switch Setting	Resistance in Ohms	Tolerance
100 Ω	100	± 3 Ω
1 k	1.001 k	± 30 Ω
2 k	2.006 k	± 60 Ω
5 k	5.039 k	± 150 Ω
10 k	10.156 k	± 302 Ω
20 k	20.60 k	± 606 Ω
50 k	54.20 k	± 1.54 kΩ
EXT	54.20 k	± 1.54 kΩ

i. Set the LOAD RESISTANCE switch to EXT.

j. CHECK — With the ohmmeter connected between OUT and the right end of R_L EXT on the DUT card, the meter should read a short circuit.

3. Check Vertical Preamp Balance

a. Set the controls as follows:

577

MAX PEAK VOLTS	6.5
VARIABLE COLLECTOR %	0
SERIES RESISTORS	.12
HORIZ VOLTS/DIV	200 V, COLLECTOR
Horizontal POSITION	centered

All Dark Gray Buttons and Knobs in except:

STEP FAMILY	SINGLE
DISPLAY FILTER NORM	out
Vertical POSITION	pull (MAG ON) centered

178

FUNCTION	—INPUT I
VERT UNITS/DIV	5 m (magnified)
SWEEP FREQUENCY (Hz)	.1

b. Press and hold the DISPLAY ZERO button. Position the spot to near the graticule center and note the spot position.

c. Release the DISPLAY ZERO button.

d. CHECK — The spot should shift not more than two divisions, ± 50 pA, from the position noted in part b.

4. Check Vertical Looping

a. Set the controls as follows:

577

MAX PEAK VOLTS	25
VARIABLE COLLECTOR %	100
COLLECTOR SUPPLY POLARITY	AC
HORIZ VOLTS/DIV	10 V, COLLECTOR
Horizontal POSITION	centered

All Dark Gray Buttons and Knobs in except:

STEP FAMILY	SINGLE
Vertical POSITION	pull (magnified) centered

178

FUNCTION	COLLECTOR SUPPLY I
VERT UNITS/DIV	2 mA (magnified)
DUT SUPPLIES Switch	ON

b. CHECK — Vertical separation (looping) of the trace should be less than one division on the .1 mA to 50 mA ranges.

5. Check Vertical Current-Mode Accuracy

a. Set the controls as follows:

577	
MAX PEAK VOLTS	6.5
VARIABLE COLLECTOR %	0
SERIES RESISTORS	.12
HORIZ VOLTS/DIV	200 V, COLLECTOR
COLLECTOR SUPPLY POLARITY	AC
All Dark Gray Buttons and Knobs in except:	
DISPLAY FILTER	
NORM	out
STEP FAMILY	SINGLE
Horizontal POSITION	centered
Vertical POSITION	centered
OFFSET MULT	
ZERO (button)	in
AID (button)	in
STEP/OFFSET AMPL	50 mA
OFFSET MULT (dial)	0.00

178	
FUNCTION	COLLECTOR SUPPLY I
VERT UNITS/DIV	50 m
SWEEP FREQUENCY (Hz)	1 k
SWEEP AMPLITUDE	fully counterclockwise
DUT SUPPLIES Switch	ON

b. Connect the 10 Ω, 1/4%, 3-watt resistor shown in Table 5-3, between STEP and CS terminals on the Op Amp DUT card. Connect a digital dc voltmeter across the 10 Ω resistor. The meter must float (meter common to the STEP terminal).

c. Note the digital voltmeter reading. Vertically and horizontally position the spot to top-center graticule lines.

d. Push to release the OFFSET ZERO button to the out position. Set the OFFSET MULT dial to position the spot to the bottom graticule line.

e. CHECK — The dc voltmeter should indicate with 4.00 volts (± 3%) of the voltage noted in part c.

f. Set the VERT UNITS/DIV and STEP/OFFSET AMPL to the next settings in Table 5-3. Push the OFFSET ZERO button in and repeat steps c and d.

g. CHECK — The voltmeter reading should be within the voltage limits set in column 4 (with the voltage noted in part c as the reference).

h. Continue the tests using Table 5-3, using the resistor values shown in column 3, through 50 nA/DIV.

i. Starting with 20 nA/DIV, use a differential dc voltmeter. Set the FUNCTION Selector to -INPUT I.

TABLE 5-3

VERT UNITS/DIV	STEP/OFFSET AMPL	Resistor Value	Meter Reading	Limit (3%)
50 mA	50 mA	10 Ω	4.00 V	±0.12 V
20 mA	20 mA		1.60 V	±0.048 V
10 mA	10 mA		0.80 V	±0.024 V
5 mA	5 mA	100 Ω	4.00 V	±0.12 V
2 mA	2 mA		1.60 V	±0.048 V
1 mA	1 mA		0.80 V	±0.024 V
.5 mA	.5 mA	1 kΩ	4.00 V	±0.12 V
.2 mA	.2 mA		1.60 V	±0.048 V
.1 mA	.1 mA		0.80 V	±0.024 V
50 μA	50 μA	10 kΩ	4.00 V	±0.12 V
20 μA	20 μA		1.60 V	±0.048 V
10 μA	10 μA		0.80 V	±0.024 V
5 μA	5 μA	100 kΩ[1]	4.00 V	±0.12 V
2 μA	2 μA		1.60 V	±0.048 V
1 μA	1 μA		0.80 V	±0.024 V
.5 μA	.5 μA	1 MΩ[1]	4.00 V	±0.12 V
.2 μA	.2 μA		1.60 V	±0.048 V
.1 μA	.1 μA		0.80 V	±0.024 V
50 nA	50 nA		0.40 V	±0.012 V

TABLE 5-3 (cont)

Use a differential voltmeter for the remaining measurements
(see part j)

20 nA	.2 V	10 MΩ[2]	1.60 V	±0.048 V
10 nA	.1 V		0.80 V	±0.024 V
5 nA	.05 V		0.40 V	±0.012 V
2 nA	.2 V	100 MΩ[2]	1.60 V	±0.048 V
1 nA	.1 V		0.80 V	±0.024 V
.5 nA	.05 V		0.40 V	±0.012 V
.2 nA	.05 V		0.16 V	±0.0048 V
.1 nA	.05 V		0.08 V	±0.0024 V
50 pA	.05 V		0.04 V	±0.0012 V

j. Connect the resistor between DUT STEP and -IN terminals. Set the OFFSET MULT dial to 0.00. Zero the differential dc voltmeter.

k. Connect the differential voltmeter common terminal to the DUT STEP terminal and the ± voltmeter terminal to the DUT -IN terminal. This minimizes noise pickup.

l. Adjust the OFFSET MULT dial for a zero-volt reading on the voltmeter. Opposing offset voltage (AID button in the out position may have to be used).

m. Position the spot to the top graticule line.

n. Disconnect the differential voltmeter positive terminal.

o. Adjust the OFFSET MULT dial to position the spot to the bottom graticule line (in OFFSET AID).

[1] If a dc voltmeter having an input impedance of less than 1000 MΩ is used to measure the voltage across the 100 kΩ and 1 MΩ resistors, the reading will be in error depending on the meter impedance. To calculate the correct voltage, use the formula:

$$V_2 = V_1 \frac{R_m}{R_m + R_s}$$

Where,

V_2 is actual voltage

V_1 is indicated voltage

R_m is meter impedance

R_s is the current-sensing resistor in the table.

[2] A shielded cable can be used to reduce noise on these measurements. Connect the shield to the Step terminal on the DUT card and to the voltmeter common (do not ground).

p. Reconnect the voltmeter and set the meter dials for a meter null.

q. CHECK — The differential meter should read voltage as indicated in Table 5-3.

r. Continue the tests as described in parts j through p for the remainder of the switch positions.

6. Check Vertical Voltage Accuracy

a. Set the controls as follows:

577	
HORIZ VOLTS/DIV	5 V, COLLECTOR
All Dark Gray Buttons and Knobs in except:	
STEP FAMILY	SINGLE
178	
SWEEP FREQUENCY (Hz)	.1
SWEEP AMPLITUDE	pull
+SUPPLY	15.0 V
-SUPPLY	TRACK +SUPPLY
LOAD RESISTANCE	50 k
SOURCE RESISTANCE	20 k
DUT SUPPLIES	OFF
FUNCTION	GAIN
VERT UNITS/DIV	50 m

b. Connect the test socket on the DUT card for an op amp, such as the 741. Place the op amp in the test socket.

c. Connect a 1 MΩ resistor between OUT and -IN. Connect a patch cord between +R, top end, and R_F, top end. Set the External Feedback Amplifier switch, the slide switch on the DUT card, away from the NORM position.

d. Connect a DVM or dc bridge between GND and the patch cord between +R and R_F. Set the DUT SUPPLIES switch to ON. Press the DISPLAY ZERO button.

e. Turn the MANUAL SWEEP control until the spot on the crt is on the bottom graticule line. Note the meter reading.

f. Turn the MANUAL SWEEP control until the spot is on the top graticule line. Note the meter reading.

g. CHECK — The sum of the readings noted in parts e and f should be as shown in Table 5-4, column 3.

h. Switch the VERT UNITS/DIV switch to 20 m and SOURCE RESISTANCE to 10 k.

i. Press the DISPLAY ZERO button. Turn the MANUAL SWEEP control to set the spot to the bottom graticule line. Note the voltage reading.

j. Turn the MANUAL SWEEP control to set the spot to the top graticule line. Note the voltage reading.

k. CHECK — The sum of the readings noted in parts i and j should be as shown in Table 5-4, column 3.

TABLE 5-4

VERT UNITS/ DIV	SOURCE RESISTANCE	Sum of the Voltages	Accuracy
50 m	20 k	4.00 V	± 120 mV
20 m	10 k	1.60 V	± 40 mV

l. Replace the 1 MΩ resistor on the DUT card with a 10 MΩ resistor.

m. CHECK — Using Table 5-5 and the procedure in parts i and j, check the accuracy at the VERT UNITS/DIV settings in column 1.

TABLE 5-5

VERT UNITS/ DIV	SOURCE RESISTANCE	Sum of the Voltages	Accuracy
10 m	50 k	0.8 V	± 24 mV
5 m	20 k	0.4 V	± 12 mV
2 m	10 k	0.16 V	± 4.8 mV
1 m	10 k	0.08 V	± 2.4 mV

n. Remove the patch cords and set the External Feedback Amplifier switch to NORM.

7. Check Sample and Hold Offset Voltage Range

a. Set the controls as follows:

577	
VARIABLE COLLECTOR %	0
MAX PEAK VOLTS	100
COLLECTOR SUPPLY POLARITY	AC
SERIES RESISTORS	2 M
STEP/OFFSET AMPL	.5 V
OFFSET MULT (dial)	1.00

All Dark Gray Buttons and Knobs in except:

STEP FAMILY	SINGLE
OFFSET ZERO	out
Horizontal POSITION	pull (X10 MAX) centered
PULSED 300 μs	out
Vertical POSITION	centered
HORIZ VOLTS/DIV	10 mV, COLLECTOR (MAG ON)
178	
VERT UNITS/DIV	10 μA
FUNCTION	COLLECTOR SUPPLY I
SOURCE RESISTANCE	50 Ω
DUT SUPPLIES	OFF

b. Connect a patch cord between OUT and STEP on the Standard Op Amp card. Connect a patch cord between +IN and CS.

c. Switch DUT SUPPLIES switch to ON.

d. Press and hold the DISPLAY ZERO button and position the spot approximately to horizontal graticule center. Note the spot position and release the DISPLAY ZERO button.

e. CHECK — The spot should shift ≥ 2.5 divisions to the left of the position noted in part d.

f. Release the AID button on the 577 to the OPPOSE position.

g. Press the DISPLAY ZERO button.

h. CHECK — The spot should shift ≥ 2.5 divisions to the right of the position noted in part d.

i. Remove the patch cords from the Op Amp card.

8. Check Power Supplies

a. Set the controls as follows:

577

HORIZ VOLTS/DIV	10 V, COLLECTOR
Vertical POSITION	centered

All Dark Gray Buttons and Knobs in except:

STEP FAMILY	SINGLE

178

FUNCTION	OFFSET V
+SUPPLY	fully counterclockwise
-SUPPLY	TRACK +SUPPLY
SWEEP AMPLITUDE	fully counterclockwise
SWEEP FREQUENCY (Hz)	.1
VERT UNITS/DIV	50 mV
DUT SUPPLIES Switch	ON

Standard Op Amp Card

Limits	fully clockwise

b. Connect the DVM between +SUPPLY and GND on the front panel. Read the voltage on the DVM.

c. CHECK — The +SUPPLY dial should indicate approximately the voltage read on the DVM in part b.

d. Reconnect the DVM between +SUPPLY and -SUPPLY on the front panel. Set +SUPPLY dial to 30.0.

e. CHECK — The voltage should be 60.0 volts, ± 0.6 volts (1%).

f. Set the DUT SUPPLIES switch to OFF. Connect a 200 Ω, 10 watt, 1% resistor from +V to GND on the Standard Op Amp card. Connect the DVM across the 200 Ω resistor and set the DUT SUPPLIES switch to ON.

g. CHECK — For +30 volts, ± 2%, ± 100 mV.

h. Set the DUT SUPPLIES switch to OFF. Reconnect the 200 Ω resistor between -V and GND. Switch the DUT SUPPLIES switch to ON. Read the voltage across the 200 Ω.

i. CHECK — For -30 volts, ± 2%, ± 100 mV.

j. Set the DUT SUPPLIES switch to OFF. Remove the 200 Ω resistor. Patch from +V to GND on the Standard Op Amp card. Set the FUNCTION switch to +SUPPLY I. Set the DUT SUPLIES swith to ON.

k. Press the DISPLAY ZERO button and position the spot to the graticule bottom center (zero reference). Release the DISPLAY ZERO button and set the DUT SUPPLIES switch to ON.

l. CHECK — For approximately four divisions of vertical shift from the zero reference (approximately 200 mA). Note that the +SUPPLY OVERLOAD lamp is lighted.

m. CHECK — That when the +I Limit control (on the Standard Op Amp card) is turned counterclockwise, the +Supply current decreases (spot moves toward the zero reference).

n. Set the DUT SUPPLIES switch to OFF. Move the patch cord from +V to -V. Set the FUNCTION switch to -SUPPLY I.

o. Press the DISPLAY ZERO button and position the spot to the graticule top center (zero reference). Release the DISPLAY ZERO button and set the DUT SUPPLIES switch to ON.

p. CHECK — For approximately four divisions of vertical shift from the zero reference (approximately 200 mA). Note that the -SUPPLY OVERLOAD lamp is lighted.

q. CHECK — That when the -I Limit control is turned counterclockwise, the -Supply current decreases (spot moves toward the zero reference).

9. Check Sweep Generator

a. Set the 577-178 controls as follows:

577

HORIZ VOLTS/DIV	5 V, COLLECTOR
Horizontal POSITION	centered
Vertical POSITION	centered

All Dark Gray Buttons and Knobs in except:

STEP FAMILY	SINGLE

178

FUNCTION	+SUPPLY I
+SUPPLY	30.0
-SUPPLY	TRACK +SUPPLY
SWEEP AMPLITUDE	midrange
SWEEP FREQUENCY (Hz)	1 k
VARIABLE	fully clockwise (X1)
DUT SUPPLIES	OFF
VERT UNITS/DIV	.5 mA

Check Sweep Generator (cont)

Test Oscilloscope	
Vert Mode	Alt
CH 1 DC	5 V/Div
CH 2 DC	.5 V/Div
Position CH 1 and 2	centered
Time/Div	.1 ms
Trigger Mode	Norm
Slope	+
Coupling	DC
Time Mark Generator	
Marker Selector	1 ms

b. Connect the Time Mark Generator to CH 2 of the Test Scope. Connect +V on the Standard Op Amp card to CH 1 of the Test Scope. Set the DUT SUPPLIES switch to ON. Trigger the Test Scope for a stable display.

c. Position the first time mark to the left graticule line on the Test Scope. Note the point at which the sine wave crosses the time mark.

d. CHECK — That the sine wave crosses the right time mark at the same point as noted in part c, ± 0.5 major horizontal divisions.

e. Set the SWEEP FREQUENCY to 100 Hz and the test scope Horizontal to 1 ms/Div.

f. CHECK — For 1 cycle in 10 time marks, ±0.5 div.

g. Set the SWEEP FREQUENCY to 10 Hz. Set the Time Mark Generator to .1 s. Set the test scope to 10 ms/Div.

h. CHECK — For 1 cycle in 1 time mark, ± 0.5 div.

i. Set the test scope for .1 s/Div[2] and the Time Mark Generator to 1 s. Set the test scope to CH 2 only and check the test scope display for 1 time mark/10 horizontal divisions. If not 1 time mark/10 divisions, adjust the horizontal Variable for 1 mark/10 divisions.

j. Set the test scope vertical to CH 1. Set the 178 SWEEP FREQUENCY control to 1 s.

k. CHECK — For 1 cycle in 10 divisions, ± 0.5 division.

l. Set the test scope to 1 s/Div (use variable if necessary). Switch the test scope vertical to CH 2. Set the Time Mark Generator to 1 s and check the time base for 10 sec in 10 divisions.

m. Set the test scope vertical to CH 1. Set the 178 SWEEP FREQUENCY to .1.

[2] If the test scope goes to only .5 sec, use the Horizontal Variable and the Time Mark Generator at 1 sec and calibrate the crt for 1 time mark/division.

n. CHECK — For 1 cycle in 10 divisions, ± 0.5 division.

o. Set the test scope horizontal to 2 s/Div. Set the SWEEP FREQUENCY VARIABLE to X.1.

p. CHECK — The sine wave on the test scope for 5 divisions, +0.25 to 2 divisions.

q. Set the SWEEP FREQUENCY to 10 Hz. Set the test scope horizontal for .2 s/Div. Set the test scope horizontal variable to Cal.

r. CHECK — Display for 1 cycle in 5 divisions, +0.25 to +2 divisions, minus the test scope accuracy[3].

s. Set the SWEEP FREQUENCY to 100 Hz. Set the test scope horizontal for 20 ms/Div.

t. CHECK — The display for 1 cycle in 5 divisions, +0.25 to +2 divisions, minus the test scope accuracy[3].

u. Set SWEEP FREQUENCY to 1 k and test scope horizontal to 2 ms/Div and repeat part s.

v. Set SWEEP FREQUENCY to .1. Set the Time Mark Generator to 5 s. Disconnect the test scope. Connect the Time Mark Generator through a .22 μF, 50 V capacitor to +V on the Standard Op Amp card. Set the 178 VERT UNITS/DIV to .1 mA. Position the trace on screen[4].

w. Turn on the storage. When the trace is at about midsweep, approximately 15 V, erase the trace, and count the number of time marks in one full sine-wave cycle.

x. CHECK — For 21 pulses, ± 7 pulses in one cycle.

10. Check Common-Mode Rejection Ratio, Method 1[5]

a. Set the controls as follows:

577

HORIZ VOLTS/DIV	2 V, COLLECTOR

All Dark Gray Buttons and Knobs in except:

STEP FAMILY	SINGLE
Vertical POSITION	Pull (MAG ON) centered

[3] Test scope accuracy can be checked with the Time Mark Generator. If the sine wave is off the graticule, to the right, move the right time mark two divisions to the left with the horizontal position control.

[4] Another method of checking part v is to use a stop watch or a watch with a sweep second hand and check for 100 seconds/cycle.

10. Check Common-Mode Rejection Ratio, Method 1[5] (cont)

178	
SWEEP FREQUENCY (Hz)	1
VARIABLE	X1 (clockwise)
+SUPPLY	15.0 V
-SUPPLY	TRACK +SUPPLY
DUT SUPPLIES Switch	OFF
SOURCE RESISTANCE	50 Ω
FUNCTION	CMRR
VERT UNITS/DIV	.1 m (magnified)

b. Using patch cords, connect the test Op Amp[5] on the Standard Op Amp card. Set the DUT SUPPLIES switch to ON. Press the DISPLAY ZERO button.

c. Set the SWEEP AMPLITUDE control for ten divisions of horizontal display.

d. CHECK — Vertical deflection of the horizontal trace should not exceed ± 3 divisions.

e. Set the VERT UNITS/DIV switch to 10 μV (magnified). Press the DISPLAY ZERO button.

f. CHECK — Vertical deflection of the horizontal trace should not exceed ±3 divisions.

g. Set the VERT UNITS/DIV switch to 1 μV (magnified). Press the DISPLAY ZERO button.

h. CHECK — Vertical deflection of the horizontal trace should not exceed ± 3 divisions.

Check Common-Mode Rejection Ratio — Method 2

a. Set the controls as follows:

577	
HORIZ VOLTS/DIV	2 V, COLLECTOR
Horizontal POSITION	centered
POWER Switch	in (off)

All Dark Gray Buttons and Knobs in except:

STEP FAMILY	SINGLE
Vertical POSITION	pull (MAG ON) centered

[5] CMRR of the test op amp must be 150 dB, specified minimum, or must be ⩾ 120 dB, measured. The noise level must be less than 2 μV, using 50 Ω source resistance. Precision Monolithics SS725 meets the 120 dB requirement. Compensate the SS725 for X1 gain according to manufacturers specification.

Check Common-Mode Rejection Ratio — Method 2 (cont)

178

FUNCTION	CMRR
SOURCE RESISTANCE	50 Ω
+SUPPLY	15.0 V
-SUPPLY	TRACK +SUPPLY
SWEEP AMPLITUDE	fully counterclockwise
SWEEP FREQUENCY (Hz)	10
VARIABLE	X1 (clockwise)
VERT UNITS/DIV	.1 m (magnified)
DUT SUPPLIES Switch	OFF

b. Construct the circuit of Fig. 5-3 on the Standard Op Amp card. This method uses an op amp having good CMRR and drives its terminals common mode, thereby improving the op amp CMRR to ≈ 160 to 180 dB.

c. Plug the Standard Op Amp card into the 178. Pull the 577 POWER switch.

d. Set the 178 DUT SUPPLIES switch to ON. Press the DISPLAY ZERO button and position the spot to graticule center. Turn the SWEEP AMPLITUDE control clockwise to display ten divisions of horizontal trace.

e. Adjust the Output Terminal CMRR control (on the test circuit) for no trace looping.

f. CHECK — Vertical deflection of the horizontal trace should not exceed ± 1.5 divisions.

g. Set the VERT UNITS/DIV to 10 μV (MAG ON) and press the DISPLAY ZERO button. Adjust the Output Terminal CMRR control for no trace looping.

h. CHECK — Vertical deflection of the horizontal trace should not exceed ± 1.5 divisions.

i. Set the VERT UNITS/DIV switch to 1 μV (MAG ON) and press the DISPLAY ZERO button. Adjust the Output Terminal CMRR control for no trace looping.

j. CHECK — Vertical deflection of the horizontal trace should not exceed ± 1.5 divisions.

k. Remove patch cords and components from the Standard Op Amp card.

⟷	PATCH CORD
●←PIN	BIFURCATED TERMINAL PIN
O	HOLE IN CIRCUIT BOARD (SOLDER)
X	WIRED CONNECTION (SOLDER)

THE SOCKET PIN NUMBERS SHOWN ARE TEST SOCKET NUMBERS FOR THE OP AMPS SHOWN. IF OTHER TYPES ARE USED, THE SOCKET NUMBERS MAY BE DIFFERENT.

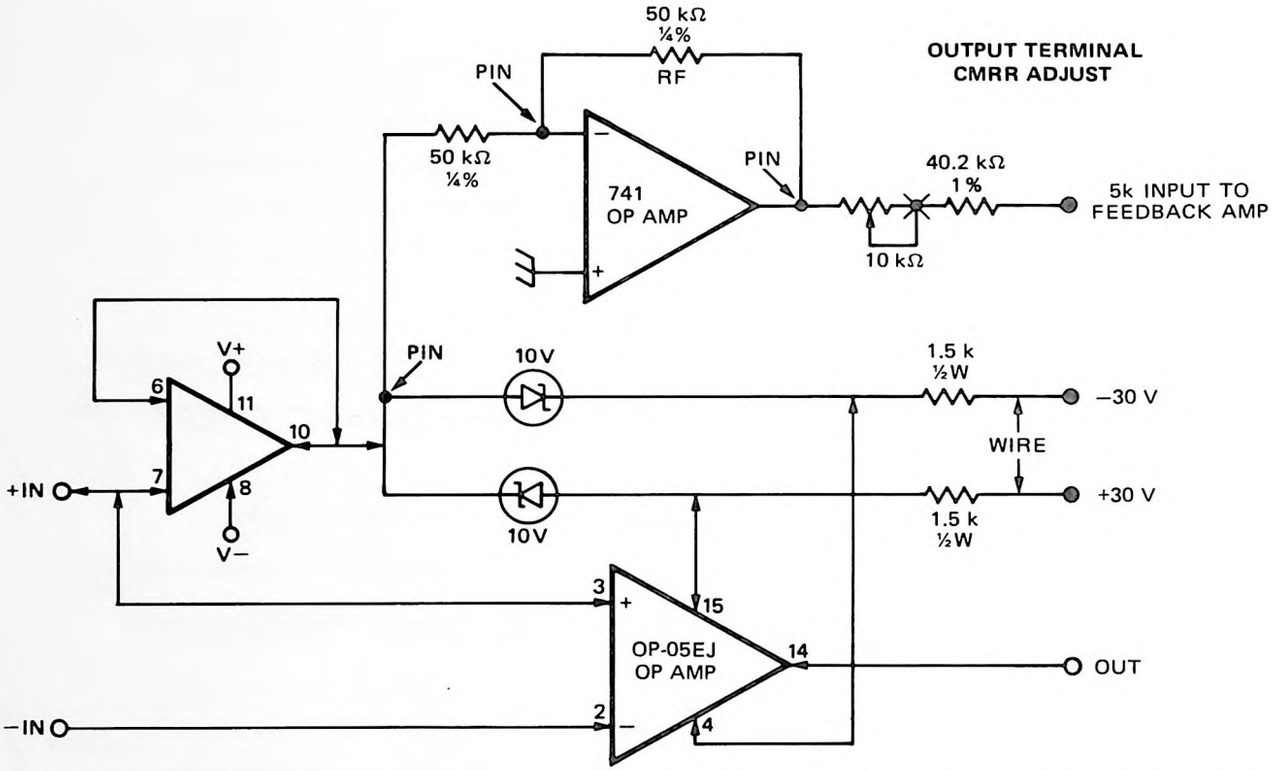

THE OP-05EJ OP AMP USED IN THIS TEST IS A LOW-NOISE DEVICE HAVING A MINIMUM SPEC OF 110 dB. ANY OP AMP AMP MEETING OR EXCEEDING 114 dB MAY BE USED. ALL WIRING SHOWN IS IN ADDITION TO THAT ON THE STANDARD OP AMP CARD. IF OTHER THAN A LOW NOISE DEVICE IS USED, THERE MAY BE CONSIDERABLE JOHNSON NOISE. THE OP-05EJ TYPICALLY DISPLAYS 1 TO 2 μV OF NOISE IN THIS TEST.

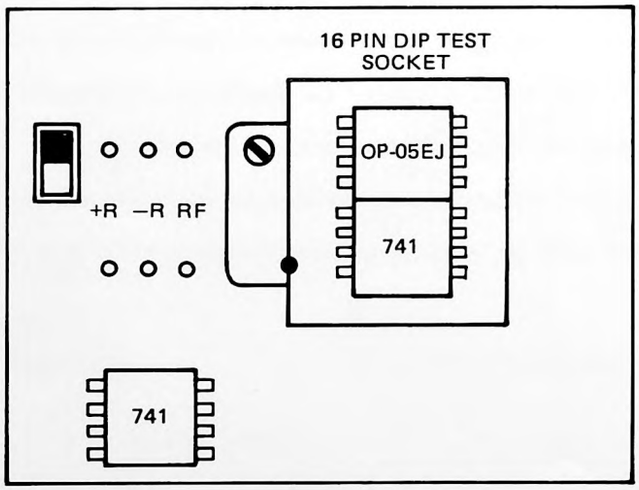

1474-42

Fig. 5-3. Test circuit for CMRR adjust.

ADJUSTMENT PROCEDURE

1. Adjust Vertical Preamplifier Balance

   a. Set the controls as follows:

577	
MAX PEAK VOLTS	6.5
VARIABLE COLLECTOR %	0
SERIES RESISTORS	.12
HORIZ VOLTS/DIV	200 V, COLLECTOR
Horizontal POSITION	centered

All Dark Gray Buttons and Knobs in except:

STEP FAMILY	SINGLE
DISPLAY FILTER NORM	out
Vertical POSITION	pull (MAG ON) centered

178	
FUNCTION	-INPUT I
VERT UNITS/DIV	5 m (magnified)
SWEEP FREQUENCY (Hz)	.1

b. Press and hold the DISPLAY ZERO button. Position the spot to or near to graticule center and note the spot position.

c. Set the VERT UNITS/DIV to 5 pA and press and hold the DISPLAY ZERO button.

d. ADJUST-R340, Vertical Preamp Balance, for no spot movement while switching between 5 mA and 5 pA. See Fig. 5-4 for location of R340.

e. Release the DISPLAY ZERO button. Set the VERT UNITS/DIV switch to 5 pA. Wait 15 seconds.

f. ADJUST-R310, Converter Balance, to position the spot to the point noted in part b.

2. Adjust Vertical Looping

   a. Set the controls as follows:

577	
MAX PEAK VOLTS	25
VARIABLE COLLECTOR %	100
COLLECTOR SUPPLY POLARITY	AC
HORIZ VOLTS/DIV	10 V, COLLECTOR
Horizontal POSITION	centered

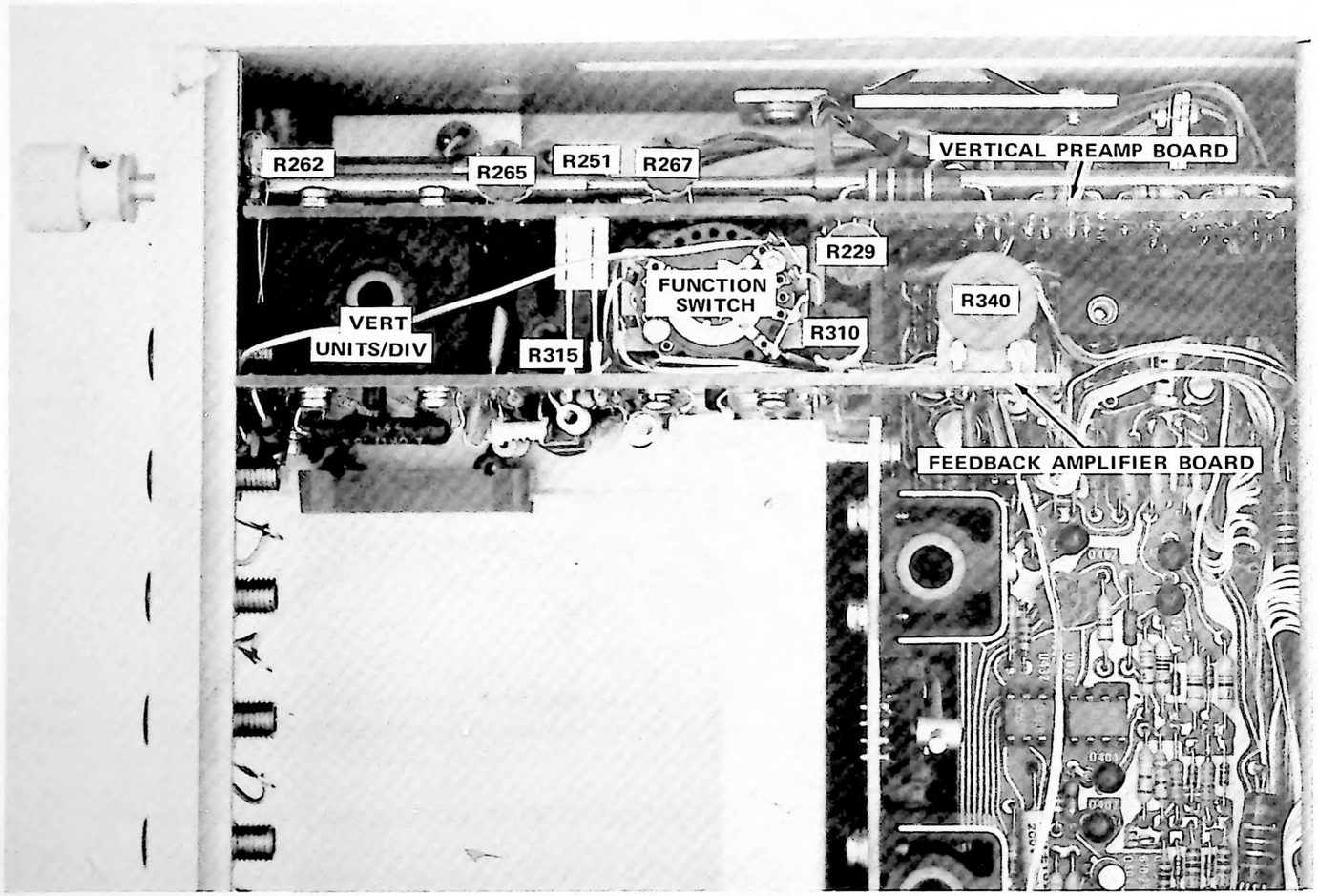

Fig. 5-4. Location of adjustments on Vertical Preamp and Feedback Amplifier board.

2. Adjust Vertical Looping (cont)

All Dark Gray Buttons and Knobs in except:

STEP FAMILY	SINGLE
Vertical POSITION	pull (MAG ON) centered

178

FUNCTION	COLLECTOR SUPPLY I
VERT UNITS/DIV	2 mA (magnified)
DUT SUPPLIES Switch	ON

b. ADJUST-R315, Vertical Looping, for minimum vertical trace separation (looping).

See Fig. 5-4 for location of R315.

3. Adjust Feedback Amplifier and Sample and Hold

a. Set the controls as follows:

577

HORIZ VOLTS/DIV	5 V, COLLECTOR
Horizontal POSITION	centered

All Dark Gray Buttons and Knobs in except:

STEP FAMILY	SINGLE
Vertical POSITION	Pulled and centered
DISPLAY FILTER	out

178

FUNCTION	CMRR
SOURCE RESISTANCE	50 Ω
+SUPPLY	+15 V
-SUPPLY	TRACK +SUPPLY
SWEEP AMPLITUDE	fully counterclockwise
DUT SUPPLIES Switch	OFF
VERT UNITS/DIV	5 μ (magnified)

b. Press and hold the DISPLAY ZERO button. Adjust Vertical POSITION to position the spot to graticule center. Release the DISPLAY ZERO button.

c. Patch GND to OUT on the Standard Op Amp card.

d. ADJUST-R229, Feedback Bal, to position the spot to graticule center.

e. Remove the patch cord from GND. Patch the test socket terminals to the Op Amp terminals on the Standard Op Amp card for a 741 Op Amp. Place the 741 in the test socket.

f. Set the DUT SUPPLIES switch to ON.

g. Press the DISPLAY ZERO button. Note the spot position and release the button.

h. ADJUST-R251, Sample and Hold Bal, to locate the spot to the position noted in part f. Repeat parts g and h until there is no spot movement while pressing and releasing the DISPLAY ZERO button.

i. Remove the patch cords and 741 op amp.

4. Adjust Power Supplies

a. Set the controls as follows:

577	
HORIZ VOLTS/DIV	10 V, COLLECTOR
Vertical POSITION	centered
All Dark Gray Buttons and Knobs in except:	
STEP FAMILY	SINGLE

178	
FUNCTION	OFFSET V
+SUPPLY	fully counterclockwise
-SUPPLY	TRACK +SUPPLY
SWEEP AMPLITUDE	fully counterclockwise
SWEEP FREQUENCY (Hz)	.1
VERT UNITS/DIV	50 mA
DUT SUPPLIES Switch	ON

Standard Op Amp Card	
Limits	fully clockwise

b. Connect the DVM between +SUPPLY and GND on the front panel. Note the voltage on the DVM, approximately ± 0.1 V or less.

c. Mechanically (loosen +SUPPLY knob set-screw) position the knob to the voltage noted in part b (voltage indicated on knob when the shaft is in the fully counterclockwise position).

d. Reconnect the DVM between +SUPPLY and -SUPPLY on the front panel. Set the +SUPPLY knob to 30.0.

e. ADJUST-R562, Supply Cal, for 60.0 volts. See Fig. 5-5 for location.

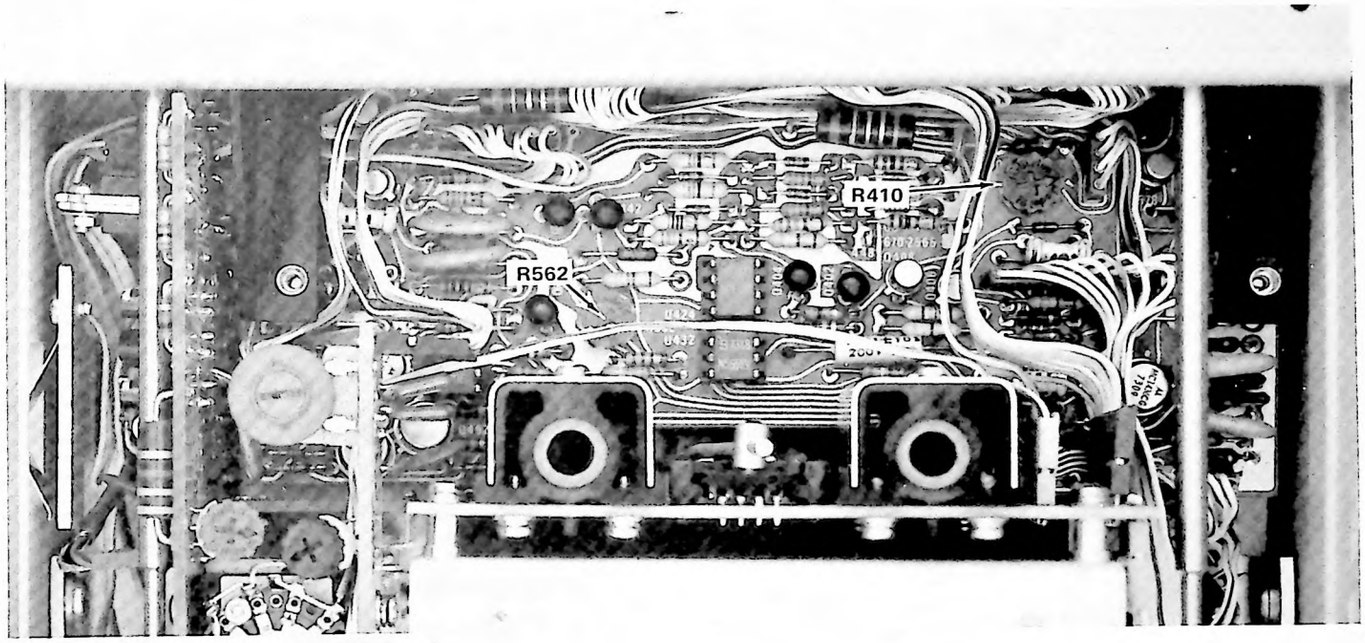

Fig. 5-5. Location of R562 and R410.

5. Adjust Preamplifier Balance and Converter Balance

a. Set the controls as follows:

577	
MAX PEAK VOLTS	6.5
VARIABLE COLLECTOR %	0
SERIES RESISTORS	.12
HORIZ VOLTS/DIV	200 V, COLLECTOR
Horizontal POSITION	centered

All Dark Gray Buttons and Knobs in except:

DISPLAY FILTER	
NORM	out
STEP FAMILY	SINGLE
Vertical POSITION Knob (X10 VERT MAG)	pulled and centered

178	
FUNCTION	-INPUT I
VERT UNITS/DIV	5 m/DIV (magnified)
SWEEP FREQUENCY (Hz)	.1
VAR	fully clockwise

b. Press and hold the DISPLAY ZERO button. Vertically and horizontally position the spot to or near to graticule center and note the spot position.

c. Set the VERT UNITS/DIV to 5 p/DIV and press and hold the DISPLAY ZERO button.

d. ADJUST-R340, Vertical Preamp Balance (see Fig. 5-4 for location) for no spot movement while switching between 5 p/DIV and 5 m/DIV.

e. Release the DISPLAY ZERO button and set the VERT UNITS/DIV switch to 5 p/DIV. Wait 15 seconds. Proceed to part f.

f. ADJUST-R310, Converter Balance, to the spot position noted in part b.

6. Adjust Sweep Generator

a. Set the 577-178 controls as follows:

577	
HORIZ VOLTS/DIV	5 V, COLLECTOR
Horizontal POSITION	centered
Vertical POSITION	centered

6. Adjust Sweep Generator (cont)

All Dark Gray Buttons and Knobs in except:

STEP FAMILY	SINGLE
178	
FUNCTION	+SUPPLY I
+SUPPLY	30.0
-SUPPLY	TRACK +SUPPLY
SWEEP AMPLITUDE	midrange
SWEEP FREQUENCY (Hz)	10
VARIABLE	fully clockwise (X1)
DUT SUPPLIES	OFF
VERT UNITS/DIV	.5 mA
Test Oscilloscope	
Vert Mode	Alt
CH 1 DC	5 V/Div
CH 2 DC	.5 V/Div
Position CH 1 and 2	centered
Time/Div	10 ms
Triggering Mode	Norm
Slope	+
Coupling	DC
Time Mark Generator	
Marker Selector	0.1 s

b. Connect the Time Mark Generator to CH 2 of the Test Scope. Connect the +V on the Standard Op Amp card to CH 1 of the Test Scope. Set the DUT SUPPLIES switch to ON. Trigger the Test Scope for a stable display. Note: CH 1 may have to be readjusted to obtain a better display.

c. Roughly adjust Sweep Freq Adj. R410, for one cycle per time mark. See Fig. 5-5 for location.

d. Turn on the Test Scope Horizontal Magnifier. Position the first time mark on the left graticule line on the Test Scope. Note the point at which the sine wave crosses the time mark.

e. ADJUST-R410, Sweep Freq, so that the sine wave crosses the twentieth time mark at the same point (vertically) as noted in part d.

7. Adjust Common-Mode Rejection Ratio, Method 1[6]

a. Set the controls as follows:

577	
HORIZ VOLTS/DIV	2 V, COLLECTOR
All Dark Gray Buttons and Knob in except:	
Vertical POSITION	pull (MAG ON) centered
178	
SWEEP FREQUENCY (Hz)	1
VARIABLE	X1 (clockwise)
+SUPPLY	+15.0 V
-SUPPLY	TRACK +SUPPLY
DUT SUPPLIES Switch	OFF
SOURCE RESISTANCE	50 Ω
FUNCTION	CMRR
VERT UNITS/DIV	.1 m (magnified)

b. Using patch cords, patch the test op amp[6] (test socket terminals) to the op amp terminals on the Standard Op Amp card. Place the test op amp[6] in the test socket. Set the DUT SUPPLIES switch to ON. Press the DISPLAY ZERO button.

c. ADJUST-R267, X10 CMRR (see Fig. 5-4 for location), for no vertical deflection of the horizontal trace.

d. Set the VERT UNITS/DIV switch to 10 μV (MAG ON) and press the DISPLAY ZERO button.

e. ADJUST-R265, X100 CMRR, for no vertical deflection of the horizontal trace.

f. Set the VERT UNITS/DIV to .1 V (MAG ON) and press the DISPLAY ZERO button and repeat parts c through f until there is no vertical deflection of the horizontal trace.

g. Set the VERT UNITS/DIV to 1 μV (MAG ON) and press the DISPLAY ZERO button.

h. ADJUST-R262, X1000 CMRR for no vertical deflection of the horizontal display.

[6] CMRR of the test op amp must be ⩾ 150 dB, minimum, or must be ⩾ 120 dB, measured. The noise level must be less than 2 μV using 50 Ω source resistance. Precision Monolithics SS725 meets the 120 dB specification. Compensate the SS725 for X10 gain according to manufacturers specification.

Adjust Common Mode Rejection Ratio, Method 2

a. Set the controls as follows:

577	
HORIZ VOLTS/DIV	2 V, COLLECTOR
Horizontal POSITION	centered
POWER Switch	in (off)
All Dark Gray Buttons and Knobs in except:	
STEP FAMILY	SINGLE
Vertical POSITION	pull (MAG ON) centered

178	
FUNCTION	CMRR
SOURCE RESISTANCE	50 Ω
+SUPPLY	15.0 V
-SUPPLY	TRACK + SUPPLY
SWEEP AMPLITUDE	fully counterclockwise
SWEEP FREQUENCY (Hz)	10
VARIABLE	X1 (clockwise)
VERT UNITS/DIV	.1 m (magnified)
DUT SUPPLIES Switch	OFF

b. Construct the circuit of Fig. 5-6 on the Standard Op Amp card. This method uses an op amp having good CMRR and drives its terminals common mode, thereby improving the op amp CMRR to ≈ 160 to 180 dB.

c. Plug the Standard Op Amp card into the 178. Pull the 577 POWER switch.

d. Set the 178 DUT SUPPLIES switch to ON. Press the DISPLAY ZERO button and position the spot to graticule center. Turn the SWEEP AMPLITUDE control clockwise to display ten divisions of horizontal trace.

e. Adjust the Output Terminal CMRR control (on the test circuit) for no trace looping.

f. ADJUST-R267, X10 CMRR (see Fig. 5-4) for no vertical deflection of the horizontal trace.

g. Set the VERT UNITS/DIV to 10 μV (magnified) and press the DISPLAY ZERO button. Adjust the Output Terminal CMRR control for no trace looping.

h. ADJUST-R265, X100 CMRR, for no vertical deflection of the horizontal trace.

i. Set the VERT UNITS/DIV to .1 mV and press the DISPLAY ZERO button. Repeat parts e through i until there is no vertical deflection.

PATCH CORD

PIN — BIFURCATED TERMINAL PIN

HOLE IN CIRCUIT BOARD (SOLDER)

WIRED CONNECTION (SOLDER)

THE SOCKET PIN NUMBERS SHOWN ARE TEST SOCKET NUMBERS FOR THE OP AMPS SHOWN. IF OTHER TYPES ARE USED, THE SOCKET NUMBERS MAY BE DIFFERENT.

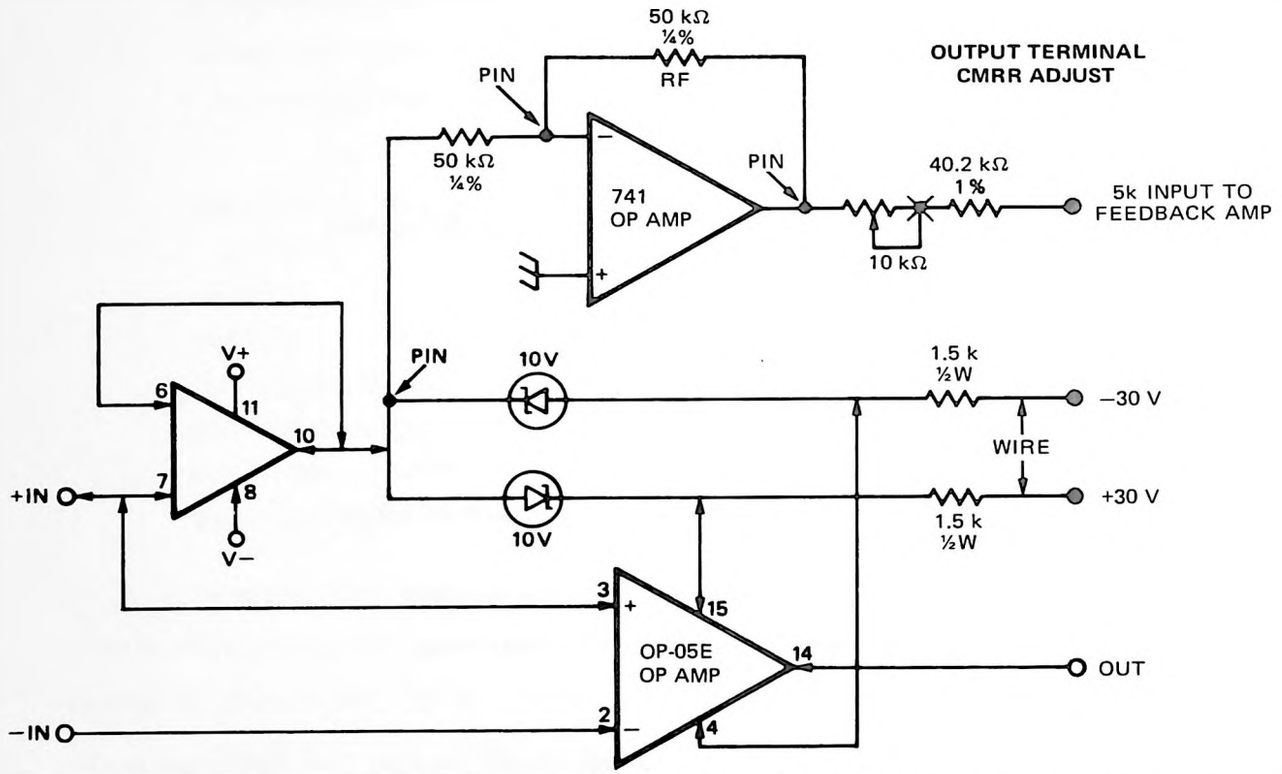

THE OP-05E OP AMP USED IN THIS TEST IS A LOW NOISE DEVICE HAVING A MINIMUM SPEC OF 110 dB. ANY OP AMP MEETING OR EXCEEDING 114 dB MAY BE USED. ALL WIRING SHOWN IS IN ADDITION TO THAT ON THE STANDARD OP AMP CARD. IF OTHER THAN A LOW NOISE DEVICE IS USED, THERE MAY BE CONSIDERABLE JOHNSON NOISE. THE OP-05E TYPICALLY DISPLAYS 1 to 2 μV OF NOISE IN THIS TEST.

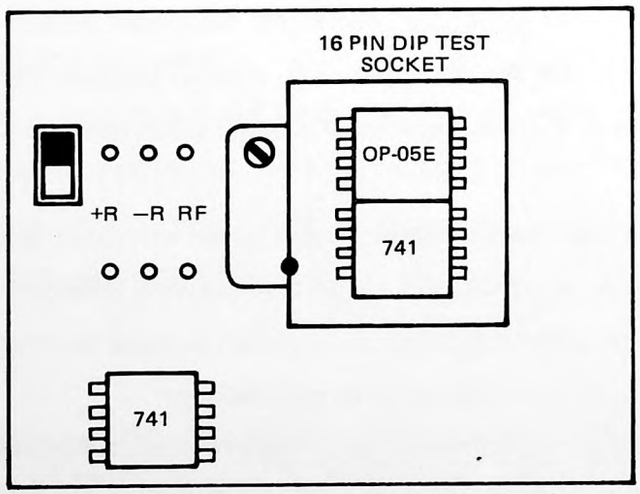

1474-45

Fig. 5-6. Test circuit for CMRR adjust.

j. Set the VERT UNITS/DIV to 1 μV (magnified) and press the DISPLAY ZERO button. Adjust the Output Terminal CMRR Adjust for no looping.

k. ADJUST-R262, X1000 CMRR, for no vertical deflection of the horizontal trace.

Adjust Common-Mode Rejection Ratio, Method 3

a. Set the controls as follows:

577	
HORIZ VOLTS/DIV	2 V, COLLECTOR
All Dark Gray Buttons and Knobs in except:	
STEP FAMILY	SINGLE
Vertical POSITION	pull (MAG ON) centered

178	
SWEEP FREQUENCY (Hz)	1
VARIABLE	X1 (fully clockwise)
+SUPPLY	15.0 V
-SUPPLY	TRACK +SUPPLY
SOURCE RESISTANCE	50 Ω
FUNCTION	CMRR
VERT UNITS/DIV	.1 m (MAG ON)
DUT SUPPLIES Switch	OFF

b. Using patch cords, patch the test op amp (test socket terminals) to the op amp terminals on the Standard Op Amp card. Place the test op amp in the test socket. Set the DUT SUPPLIES switch to ON. Press the DISPLAY ZERO button.

c. Set the SWEEP AMPLITUDE to display ten divisions of horizontal deflection.

d. ADJUST-R267, X10 CMRR (see Fig. 5-4 for location), for no vertical deflection of the horizontal trace.

e. Set the VERT UNITS/DIV switch to 10 μV (MAG ON) and press the DISPLAY ZERO button.

f. ADJUST-R265, X100 CMRR, for no vertical deflection of the horizontal trace.

g. Set the VERT UNITS/DIV switch to .1 mV (MAG ON). Press the DISPLAY ZERO button and repeat parts d through f until there is no vertical deflection of the horizontal trace. If the CMRR is not 120 dB, but is a known (recorded) value, adjust the CMRR to the known value.

h. Remove the test op amp from the Standard Op Amp card.

i. Reset the controls as follows:

178

VERT UNITS/DIV	1 μV (MAG ON)
FUNCTION	GAIN
SWEEP AMPLITUDE	fully counterclockwise

Differential Input Test Oscilloscope

Vertical Input	10 μV, DC
Horizontal Time/Div	5 ms
Trigger	Auto
Probes	X1, identical lead length

or

In lieu of a test scope, use a DVM having 1 μV resolution.

j. Connect a lead between the R_F terminal (upper end) and the third hole from the left of the upper-right corner of the DUT card. Keep the lead short.

k. Press the DISPLAY ZERO button. Switch the External Feedback selector (see Fig. 5-6) (to the left of the test socket) away from the NORM position.

l. Connect both test oscilloscopes probes (or the DVM) to -IN on the DUT card, using a bifurcated pin terminal. Twist the probe leads together to minimize noise.

m. Note the dc voltage level. Connect one of the probes (or one of the DVM leads) to the +IN terminal on the DUT card.

n. ADJUST-R262, X1000 CMRR, for the dc level noted in part m.

NOTE

Performing parts i through n calibrate the 50 μV, 20 μV, and 10 μV (5 μV, 2 μV, and 1 μV with magnifier on) ranges. If the X10 CMRR or X100 CMRR controls are re-adjusted, the X1000 range is no longer calibrated and parts i through n must be repeated.

o. To calculate CMRR, plug the test op amp into the test socket on the DUT card and calculate the CMRR, in dB, as follows:

Switch the VERT UNTS/DIV to 1 μV (MAG ON) and measure the vertical deflection. It may be necessary, if the CMRR on the device is low, to switch the VERT UNITS/DIV to the next lower decade (10 μV/DIV).

Divide the horizontal volts (horizontal display) by the vertical deflection in μV.

Example: $\frac{\text{20 V (horizontal deflection)}}{\text{40 } \mu\text{V (vertical deflection)}}$

$$\text{CMRR} = \frac{20\text{ V}}{40\ \mu\text{V}} = .5 \times 10^6$$

$$\text{CMRR} = 5 \times 10^5$$

$$\text{CMRR} = 20 \log_{10} 5 \times 10^5$$

$$\text{CMRR} = 20 \times 5.69897$$

$$\text{CMRR} \cong 114\text{ dB}$$

REPLACEABLE ELECTRICAL PARTS

PARTS ORDERING INFORMATION

Replacement parts are available from or through your local Tektronix, Inc. Field Office or representative.

Changes to Tektronix instruments are sometimes made to accommodate improved components as they become available, and to give you the benefit of the latest circuit improvements developed in our engineering department. It is therefore important, when ordering parts, to include the following information in your order: Part number, instrument type or number, serial number, and modification number if applicable.

If a part you have ordered has been replaced with a new or improved part, your local Tektronix, Inc. Field Office or representative will contact you concerning any change in part number.

Change information, if any, is located at the rear of this manual.

SPECIAL NOTES AND SYMBOLS

X000	Part first added at this serial number
00X	Part removed after this serial number

ITEM NAME

In the Parts List, an Item Name is separated from the description by a colon (:). Because of space limitations, an Item Name may sometimes appear as incomplete. For further Item Name identification, the U.S. Federal Cataloging Handbook H6-1 can be utilized where possible.

ABBREVIATIONS

ACTR	ACTUATOR	PLSTC	PLASTIC
ASSY	ASSEMBLY	QTZ	QUARTZ
CAP	CAPACITOR	RECP	RECEPTACLE
CER	CERAMIC	RES	RESISTOR
CKT	CIRCUIT	RF	RADIO FREQUENCY
COMP	COMPOSITION	SEL	SELECTED
CONN	CONNECTOR	SEMICOND	SEMICONDUCTOR
ELCTLT	ELECTROLYTIC	SENS	SENSITIVE
ELEC	ELECTRICAL	VAR	VARIABLE
INCAND	INCANDESCENT	WW	WIREWOUND
LED	LIGHT EMITTING DIODE	XFMR	TRANSFORMER
NONWIR	NON WIREWOUND	XTAL	CRYSTAL

CROSS INDEX MFR. CODE NUMBER TO MANUFACTURER

MFR.CODE	MANUFACTURER	ADDRESS	CITY,STATE,ZIP
00213	SAGE ELECTRONICS CORP., SUBSIDIARY OF NYTRONICS, INC.,	ORANGE ST.	DARLINGTON, SC 29532
01121	ALLEN-BRADLEY CO.	1201 2ND ST. SOUTH	MILWAUKEE, WI 53204
01295	TEXAS INSTRUMENTS, INC., SEMICONDUCTOR GROUP	P. O. BOX 5012	DALLAS, TX 75222
03888	KDI PYROFILM CORP.	60 S. JEFFERSON RD.	WHIPPANY, NJ 07981
04713	MOTOROLA, INC., SEMICONDUCTOR PRODUCTS DIV.	5005 E. MCDOWELL RD.	PHOENIX, AZ 85036
07263	FAIRCHILD SEMICONDUCTOR, A DIV. OF FAIRCHILD CAMERA AND INSTRUMENT CORP.	464 ELLIS ST.	MOUNTAIN VIEW, CA 94042
07910	TELEDYNE SEMICONDUCTOR	12515 CHADRON AVE.	HAWTHORNE, CA 90250
08806	GENERAL ELECTRIC CO., MINIATURE LAMP PRODUCTS DEPT.	NELA PK.	CLEVELAND, OH 44112
10389	CHICAGO SWITCH, INC.	2035 WABANSIA AVE.	CHICAGO, IL 60647
12040	NATIONAL SEMICONDUCTOR CORP.	COMMERCE DRIVE	DANBURY, CT 06810
12969	UNITRODE CORP.	580 PLEASANT ST.	WATERTOWN, MA 02172
14099	SEMTECH CORP.	652 MITCHELL ROAD	NEWBURY PARK, CA 91320
15818	TELEDYNE SEMICONDUCTOR	1300 TERRA BELLA AVE.	MOUNTAIN VIEW, CA 94040
17856	SILICONIX, INC.	2201 LAURELWOOD RD.	SANTA CLARA, CA 95054
18324	SIGNETICS CORP.	811 E. ARQUES	SUNNYVALE, CA 94086
18788	GENERAL ILLUMINATION INC.	2958 N. CLEVELAND ST.	ST. PAUL, MN 55113
21845	SOLITRON DEVICES, INC., TRANSISTOR DIV.	1177 BlUE HERON BlVD.	RIVIERA BEACH, FL 33404
56289	SPRAGUE ELECTRIC CO.		NORTH ADAMS, MA 01247
71400	BUSSMAN MFG., DIVISION OF MCGRAW-EDISON CO.	2536 W. UNIVERSITY ST.	ST. LOUIS, MO 63107
71450	CTS CORP.	1142 W. BEARDSLEY AVE.	ELKHART, IN 46514
71590	CENTRALAB ELECTRONICS, DIV. OF GLOBE-UNION, INC.	5757 N. GREEN BAY AVE.	MILWAUKEE, WI 53201
72982	ERIE TECHNOLOGICAL PRODUCTS, INC.	644 W. 12TH ST.	ERIE, PA 16512
73138	BECKMAN INSTRUMENTS, INC., HELIPOT DIV.	2500 HARBOR BlVD.	FULLERTON, CA 92634
75042	TRW ELECTRONIC COMPONENTS, IRC FIXED RESISTORS, PHILADELPHIA DIVISION	401 N. BROAD ST.	PHILADELPHIA, PA 19108
76854	OAK INDUSTRIES, INC., SWITCH DIV.	S. MAIN ST.	CRYSTAL LAKE, IL 60014
80009	TEKTRONIX, INC.	P. O. BOX 500	BEAVERTON, OR 97077
81073	GRAYHILL, INC.	561 HILLGROVE AVE.	LA GRANGE, IL 60525
81483	INTERNATIONAL RECTIFIER CORP.	9220 SUNSET BlVD.	LOS ANGELES, CA 90069
91637	DALE ELECTRONICS, INC.	P. O. BOX 609	COLUMBUS, NB 68601

Ckt No.	Tektronix Part No.	Serial/Model No. Eff	Dscont	Name & Description	Mfr Code	Mfr Part Number
A1	670-2568-00			CKT BOARD ASSY:INTERFACE	80009	670-2568-00
A2	670-2569-00			CKT BOARD ASSY:VERTICAL PREAMP	80009	670-2569-00
A3	670-2566-00			CKT BOARD ASSY:FEEDBACK AMPL	80009	670-2566-00
A4	670-2565-00	B010100	B029999	CKT BOARD ASSY:POWER SUPPLY	80009	670-2565-00
A4	670-2565-01	B030000	B039999	CKT BOARD ASSY:POWER SUPPLY	80009	670-2565-01
A4	670-2565-02	B040000		CKT BOARD ASSY:POWER SUPPLY	80009	670-2565-02
A5	670-2567-00			CKT BOARD ASSY:STANDARD OP AMPL	80009	670-2567-00
C15	281-0536-00	XB030710		CAP.,FXD,CER DI:1000PF,10%,500V	72982	301055X5P102K
C23	283-0110-00			CAP.,FXD,CER DI:0.005UF,+80-20%,150V	56289	19C242B
C25	283-0110-00			CAP.,FXD,CER DI:0.005UF,+80-20%,150V	56289	19C242B
C131	283-0000-00			CAP.,FXD,CER DI:0.001UF,+100-0%,500V	72982	831-516E102P
C141	283-0000-00			CAP.,FXD,CER DI:0.001UF,+100-0%,500V	72982	831-516E102P
C205	281-0526-00			CAP.,FXD,CER DI:1.5PF,+/-0.5PF,500V	72982	301-000S2K0159D
C208	283-0003-00			CAP.,FXD,CER DI:0.01UF,+80-20%,150V	72982	855-547E103Z
C227	281-0504-00			CAP.,FXD,CER DI:10PF,+/-1PF,500V	72982	301-000C0G0100F
C254	285-0898-00			CAP.,FXD,PLSTC:0.47UF,10%,100V	56289	LP66A1B474K
C263	283-0003-00			CAP.,FXD,CER DI:0.01UF,+80-20%,150V	72982	855-547E103Z
C291	283-0081-00			CAP.,FXD,CER DI:0.1UF,+80-20%,25V	56289	36C600
C293	283-0081-00			CAP.,FXD,CER DI:0.1UF,+80-20%,25V	56289	36C600
C295	283-0081-00			CAP.,FXD,CER DI:0.1UF,+80-20%,25V	56289	36C600
C306	283-0000-00			CAP.,FXD,CER DI:0.001UF,+100-0%,500V	72982	831-516E102P
C315	283-0119-00			CAP.,FXD,CER DI:2200PF,5%,200V	72982	855-535B222J
C318	283-0000-00			CAP.,FXD,CER DI:0.001UF,+100-0%,500V	72982	831-516E102P
C320	281-0518-00			CAP.,FXD,CER DI:47PF,+/-9.4PF,500V	72982	301-000U2J0470M
C322	281-0536-00			CAP.,FXD,CER DI:1000PF,10%,500V	72982	301-055X5P0102K
C324	281-0523-00			CAP.,FXD,CER DI:100PF,+/-20PF,350V	72982	301-000U2M0101M
C342	281-0512-00			CAP.,FXD,CER DI:27PF,+/-2.7PF,500V	72982	308-000C0G0270K
C352	281-0504-00			CAP.,FXD,CER DI:10PF,+/-1PF,500V	72982	301-000C0G0100F
C359	283-0003-00			CAP.,FXD,CER DI:0.01UF,+80-20%,150V	72982	855-547E103Z
C361	281-0546-00			CAP.,FXD,CER DI:330PF,10%,500V	72982	301-000X5P0331K
C371	283-0059-00			CAP.,FXD,CER DI:1UF,+80-20%,25V	72982	8141N038651105Z
C373	283-0059-00			CAP.,FXD,CER DI:1UF,+80-20%,25V	72982	8141N038651105Z
C406	281-0543-00			CAP.,FXD,CER DI:270PF,10%,500V	72982	301-055X5P1271K
C424, C425	295-0158-00			CAP.,MATCHED:0.001UF,1UF	80009	295-0158-00
C442	283-0081-00			CAP.,FXD,CER DI:0.1UF,+80-20%,25V	56289	36C600
C452	283-0081-00			CAP.,FXD,CER DI:0.1UF,+80-20%,25V	56289	36C600
C472	281-0549-00			CAP.,FXD,CER DI:68PF,10%,500V	72982	301-000U2J0680K
C475	290-0522-00			CAP.,FXD,ELCTLT:1UF,20%,50V	56289	196D105X0050HA1
C476	283-0111-00			CAP.,FXD,CER DI:0.1UF,20%,50V	72982	8131N075651104M
C482	283-0010-00			CAP.,FXD,CER DI:0.05UF,+100-20%,50V	56289	273C20
C484	290-0522-00			CAP.,FXD,ELCTLT:1UF,20%,50V	56289	196D105X0050HA1
C521	281-0580-00			CAP.,FXD,CER DI:470PF,10%,500V	72982	301-000Z5D0471K
C542	283-0000-00			CAP.,FXD,CER DI:0.001UF,+100-0%,500V	72982	831-516E102P
C549	281-0518-00			CAP.,FXD,CER DI:47PF,+/-9.4PF,500V	72982	301-000U2J0470M
C562	283-0081-00			CAP.,FXD,CER DI:0.1UF,+80-20%,25V	56289	36C600
C566	283-0081-00			CAP.,FXD,CER DI:0.1UF,+80-20%,25V	56289	36C600
C574	281-0523-00			CAP.,FXD,CER DI:100PF,+/-20PF,350V	72982	301-000U2M0101M
C575	290-0522-00			CAP.,FXD,ELCTLT:1UF,20%,50V	56289	196D105X0050HA1
C576	283-0111-00			CAP.,FXD,CER DI:0.1UF,20%,50V	72982	8131N075651104M
C582	283-0010-00			CAP.,FXD,CER DI:0.05UF,+100-20%,50V	56289	273C20
C584	290-0522-00			CAP.,FXD,ELCTLT:1UF,20%,50V	56289	196D105X0050HA1
CR14	152-0243-00			SEMICOND DEVICE:ZENER,0.4W,15V,5%	81483	1N965B
CR18	152-0243-00			SEMICOND DEVICE:ZENER,0.4W,15V.5%	81483	1N965B

[1]Individual timing capacitors in this assembly must be ordered by the 9-digit part number, letter suffix and tolerance printed on the timing capacitor to be replaced. The letter suffix and the tolerance should be the same for all of the timing capacitors in the assembly.
EXAMPLE: 285-XXXX-XX F-

Ckt No.	Tektronix Part No.	Serial/Model No. Eff	Dscont	Name & Description	Mfr Code	Mfr Part Number
CR151	152-0242-00			SEMICOND DEVICE:SILICON,225V,200MA	12969	NDP341
CR152	152-0242-00			SEMICOND DEVICE:SILICON,225V,200MA	12969	NDP341
CR211	152-0141-02			SEMICOND DEVICE:SILICON,30V,150MA	07910	1N4152
CR226	152-0141-02			SEMICOND DEVICE:SILICON,30V,150MA	07910	1N4152
CR282	152-0141-02			SEMICOND DEVICE:SILICON,30V,150MA	07910	1N4152
CR306	152-0367-00			SEMICOND DEVICE:SILICON,20V,20PA	07263	FSA1540
CR307	152-0141-02			SEMICOND DEVICE:SILICON,30V,150MA	07910	1N4152
CR321	152-0141-02			SEMICOND DEVICE:SILICON,30V,150MA	07910	1N4152
CR322	152-0141-02			SEMICOND DEVICE:SILICON,30V,150MA	07910	1N4152
CR402	152-0141-02	XB030000		SEMICOND DEVICE:SILICON,30V,150MA	07910	1N4152
CR404	152-0141-02	XB030000		SEMICOND DEVICE:SILICON,30V,150MA	07910	1N4152
CR406	152-0141-02			SEMICOND DEVICE:SILICON,30V,150MA	07910	1N4152
CR443	152-0141-02			SEMICOND DEVICE:SILICON,30V,150MA	07910	1N4152
CR444	152-0141-02			SEMICOND DEVICE:SILICON,30V,150MA	07910	1N4152
CR445	152-0141-02			SEMICOND DEVICE:SILICON,30V,150MA	07910	1N4152
CR453	152-0141-02			SEMICOND DEVICE:SILICON,30V,150MA	07910	1N4152
CR454	152-0141-02			SEMICOND DEVICE:SILICON,30V,150MA	07910	1N4152
CR455	152-0141-02			SEMICOND DEVICE:SILICON,30V,150MA	07910	1N4152
CR472	152-0141-02			SEMICOND DEVICE:SILICON,30V,150MA	07910	1N4152
CR482	152-0040-00			SEMICOND DEVICE:SILICON,600V,1A	14099	SC6
CR484	152-0040-00			SEMICOND DEVICE:SILICON,600V,1A	14099	SC6
CR492	152-0141-02			SEMICOND DEVICE:SILICON,30V,150MA	07910	1N4152
CR493	152-0141-02			SEMICOND DEVICE:SILICON,30V,150MA	07910	1N4152
CR494	152-0141-02			SEMICOND DEVICE:SILICON,30V,150MA	07910	1N4152
CR520	152-0141-02			SEMICOND DEVICE:SILICON,30V,150MA	07910	1N4152
CR532	152-0141-02			SEMICOND DEVICE:SILICON,30V,150MA	07910	1N4152
CR533	152-0141-02			SEMICOND DEVICE:SILICON,30V,150MA	07910	1N4152
CR572	152-0141-02			SEMICOND DEVICE:SILICON,30V,150MA	07910	1N4152
CR582	152-0040-00			SEMICOND DEVICE:SILICON,600V,1A	14099	SC6
CR584	152-0040-00			SEMICOND DEVICE:SILICON,600V,1A	14099	SC6
CR592	152-0141-02			SEMICOND DEVICE:SILICON,30V,150MA	07910	1N4152
CR593	152-0141-02			SEMICOND DEVICE:SILICON,30V,150MA	07910	1N4152
CR594	152-0141-02			SEMICOND DEVICE:SILICON,30V,150MA	07910	1N4152
DS236	150-0075-00			LAMP,INCAND:19V,0.0126 TO 0.0154A	08806	2149D
DS268	150-0075-00			LAMP,INCAND:19V,0.0126 TO 0.0154A	08806	2149D
DS281	150-0048-00			LAMP,INCAND:5V,60MA	08806	683
DS284	150-0048-00			LAMP,INCAND:5V,60MA	08806	683
DS286	150-0048-00			LAMP,INCAND:5V,60MA	08806	683
DS441	150-0133-00			LAMP,CARTRIDGE:14V,80MA,RED DOME LENS	18788	T100-7-H538
DS478	150-0048-00			LAMP,INCAND:5V,60MA	08806	683
DS578	150-0048-00			LAMP,INCAND:5V,60MA	08806	683
F236	159-0083-00			FUSE,CARTRIDGE:3AG,0.15A,250V,FAST-BLOW	71400	AGC15-100
F268	159-0083-00			FUSE,CARTRIDGE:3AG,0.15A,250V,FAST-BLOW	71400	AGC15-100
J40	136-0140-00			JACK,TIP:BANANA STYLE,CHARCOAL GRAY CAP	80009	136-0140-00
J50	136-0140-00			JACK,TIP:BANANA STYLE,CHARCOAL GRAY CAP	80009	136-0140-00
J60	136-0140-00			JACK,TIP:BANANA STYLE,CHARCOAL GRAY CAP	80009	136-0140-00
J70	136-0140-00			JACK,TIP:BANANA STYLE,CHARCOAL GRAY CAP	80009	136-0140-00
J80	136-0140-00			JACK,TIP:BANANA STYLE,CHARCOAL GRAY CAP	80009	136-0140-00
J90	136-0140-00			JACK,TIP:BANANA STYLE,CHARCOAL GRAY CAP	80009	136-0140-00
Q214	151-0188-00			TRANSISTOR:SILICON,PNP	04713	2N3906
Q222	151-0367-00			TRANSISTOR:SILICON,NPN,SEL FROM 3571TP	80009	151-0367-00

Ckt No.	Tektronix Part No.	Serial/Model No. Eff	Dscont	Name & Description	Mfr Code	Mfr Part Number
Q226	151-0188-00			TRANSISTOR:SILICON,PNP	04713	2N3906
Q252A,B	151-1037-00			TRANSISTOR:SILICON,JFE N-CHANNEL	21845	ED1553
Q280	151-0301-00			TRANSISTOR:SILICON,PNP	04713	2N2907A
Q284	151-0302-00			TRANSISTOR:SILICON,NPN	04713	2N2222A
Q286	151-0302-00			TRANSISTOR:SILICON,NPN	04713	2N2222A
Q310A,B	151-1077-00			TRANSISTOR:SILICON,JFE N- CHANNEL,DUAL	17856	2N5908
Q402	151-0342-00			TRANSISTOR:SILICON,PNP	07263	2N4249
Q404	151-0342-00			TRANSISTOR:SILICON,PNP	07263	2N4249
Q406	151-0126-00			TRANSISTOR:SILICON,NPN	07263	2N2484
Q408	151-0126-00			TRANSISTOR:SILICON,NPN	07263	2N2484
Q442	151-0342-00			TRANSISTOR:SILICON,PNP	07263	2N4249
Q452	151-0341-00			TRANSISTOR:SILICON,NPN	07263	2N3565
Q462	151-0342-00			TRANSISTOR:SILICON,PNP	07263	2N4249
Q472	151-0126-00			TRANSISTOR:SILICON,NPN	07263	2N2484
Q478	151-0301-00			TRANSISTOR:SILICON,PNP	04713	2N2907A
Q484	151-0373-00			TRANSISTOR:SILICON,PNP	04713	SJE925
Q492	151-0103-00			TRANSISTOR:SILICON,NPN	04713	2N2219A
Q520	151-1059-00			TRANSISTOR:SILICON,JFE N-CHANNEL	15818	U1897E
Q536	151-0432-00			TRANSISTOR:SILICON,NPN	12040	SM07391
Q538	151-0342-00			TRANSISTOR:SILICON,PNP	07263	2N4249
Q546	151-0462-00			TRANSISTOR:SILICON,PNP	01295	TIP30C
Q548	151-0464-00			TRANSISTOR:SILICON,PNP	01295	TIP29C
Q572	151-0342-00			TRANSISTOR:SILICON,PNP	07263	2N4249
Q578	151-0302-00			TRANSISTOR:SILICON,NPN	04713	2N2222A
Q584	151-0349-00			TRANSISTOR:SILICON,NPN	04713	SJE924
Q592	151-0235-00			TRANSISTOR:SILICON,PNP	04713	2N4890
R10	311-1568-00			RES.,VAR,NONWIR:50 OHM,20%,0.50W	73138	91A50R00M
R14	315-0104-00	XB030710		RES.,FXD,CMPSN:100K OHM,5%,0.25W	01121	CB1045
R15	315-0102-00	XB030710		RES.,FXD,CMPSN:1K OHM,5%,0.25W	01121	CB1025
R16	315-0102-00	XB030710		RES.,FXD,CMPSN:1K OHM,5%,0.25W	01121	CB1025
R20	311-1568-00			RES.,VAR,NONWIR:50 OHM,20%,0.50W	73138	91A50R00M
R111	308-0545-00			RES.,FXD,WW:100 OHM,0.5%,5W	D0213	1250S-100R0D
R113	308-0507-00			RES.,FXD,WW:1K OHM,1%,3W	91637	RS2B-B10000F
R115	308-0759-00			RES.,FXD,WW:2.08K OHM,1%,3W	91637	RS2B-B20800F
R116	321-0339-00			RES.,FXD,FILM:33.2K OHM,1%,0.125W	75042	CEAT0-3322F
R117	322-0264-00			RES.,FXD,FILM:5.49K OHM,1%,0.25W	75042	CEBT0-5491F
R119	321-0298-00			RES.,FXD,FILM:12.4K OHM,1%,0.125W	75042	CEAT0-1242F
R121	315-0302-00			RES.,FXD,CMPSN:3K OHM,5%,0.25W	01121	CB3025
R131	321-0289-01			RES.,FXD,FILM:10K OHM,0.5%,0.125W	75042	CEAT0-1002D
R132	321-0318-02			RES.,FXD,FILM:20K OHM,0.5%,0.125W	75042	CEAT2-2002D
R133	321-0756-01			RES.,FXD,FILM:50K OHM,0.5%,0.125W	91637	MFF1816G50001D
R141	321-0289-01			RES.,FXD,FILM:10K OHM,0.5%,0.125W	75042	CEAT0-1002D
R142	321-0318-02			RES.,FXD,FILM:20K OHM,0.5%,0.125W	75042	CEAT2-2002D
R143	321-0756-01			RES.,FXD,FILM:50K OHM,0.5%,0.125W	91637	MFF1816G50001D
R202	321-0260-01			RES.,FXD,FILM:4.99K OHM,0.5%,0.125W	75042	CEAT0-4991D
R204	321-0692-00			RES.,FXD,FILM:49.9K OHM,0.5%,0.125W	75042	CEAT0-4992D
R205	321-0692-00			RES.,FXD,FILM:49.9K OHM,0.5%,0.125W	75042	CEAT0-4992D
R206	321-0356-00			RES.,FXD,FILM:49.9K OHM,1%,0.125W	75042	CEAT0-4992F
R208	316-0472-00			RES.,FXD,CMPSN:4.7K OHM,10%,0.25W	01121	CB4721
R214	315-0512-00			RES.,FXD,CMPSN:5.1K OHM,5%,0.25W	01121	CB5125
R216	316-0151-00			RES.,FXD,CMPSN:150 OHM,10%,0.25W	01121	CB1511
R221	316-0152-00			RES.,FXD,CMPSN:1.5K OHM,10%,0.25W	01121	CB1521
R223	315-0620-00			RES.,FXD,CMPSN:62 OHM,5%,0.25W	01121	CB6205
R224	316-0151-00			RES.,FXD,CMPSN:150 OHM,10%,0.25W	01121	CB1511
R226	304-0331-00			RES.,FXD,CMPSN:330 OHM,10%,1W	01121	GB3311

Ckt No.	Tektronix Part No.	Serial/Model No. Eff	Dscont	Name & Description	Mfr Code	Mfr Part Number
R227	315-0161-00			RES.,FXD,CMPSN:160 OHM,5%,0.25W	01121	CB1615
R228	316-0102-00			RES.,FXD,CMPSN:1K OHM,10%,0.25W	01121	CB1021
R229	311-1562-00			RES.,VAR,NONWIR:2K OHM,20%,0.50W	73138	91A-20000M
R231 R232	325-0162-00			RES.SET.MTCHD:45K/44.8K OHM,0.1%,0.25W	80009	325-0162-00
R233 R234	325-0165-00			RES.SET MTCHD:4.5K/4.478K OHM,0.1%,0.25W	80009	325-0165-00
R235 R236	325-0164-00			RES.SET.MTCHD:450/446 OHM,0.1%,0.25W	80009	325-0164-00
R238 R239	325-0163-00			RES.SET.MTCHD:50/50 OHM,0.1%,0.25W	80009	325-0163-00
R251	311-1566-00			RES.,VAR,NONWIR:200 OHM,20%,0.50W	73138	91A-200R0M
R252	321-0297-00			RES.,FXD,FILM:12.1K OHM,1%,0.125W	75042	CEAT0-1212F
R253	321-0297-00			RES.,FXD,FILM:12.1K OHM,1%,0.125W	75042	CEAT0-1212F
R254	321-0097-00			RES.,FXD,FILM:100 OHM,1%,0.125W	75042	CEAT0-1000F
R255	316-0102-00			RES.,FXD,CMPSN:1K OHM,10%,0.25W	01121	CB1021
R261	316-0103-00			RES.,FXD,CMPSN:10K OHM,10%,0.25W	01121	CB1031
R262	311-1564-00			RES.,VAR,NONWIR:500 OHM,20%,0.50W	73138	91A-500R0M
R263	316-0180-00			RES.,FXD,CMPSN:18 OHM,10%,0.25W	01121	CB1801
R265	311-1568-00			RES.,VAR,NONWIR:50 OHM,20%,0.50W	73138	91A50R00M
R267	311-1594-00			RES.,VAR,NONWIR:10 OHM,20%,0.50W	73138	91A10R00M
R271	321-0618-00			RES.,FXD,FILM:250K OHM,1%,0.125W	75042	CEAT0-2503F
R272	321-0618-00			RES.,FXD,FILM:250K OHM,1%,0.125W	75042	CEAT0-2503F
R280	316-0332-00			RES.,FXD,CMPSN:3.3K OHM,10%,0.25W	01121	CB3321
R281	316-0332-00			RES.,FXD,CMPSN:3.3K OHM,10%,0.25W	01121	CB3321
R284	316-0152-00			RES.,FXD,CMPSN:1.5K OHM,10%,0.25W	01121	CB1521
R286	316-0152-00			RES.,FXD,CMPSN:1.5K OHM,10%,0.25W	01121	CB1521
R291	307-0107-00			RES.,FXD,CMPSN:5.6 OHM,5%,0.25W	01121	CB56G5
R293	307-0107-00			RES.,FXD,CMPSN:5.6 OHM,5%,0.25W	01121	CB56G5
R295	307-0107-00			RES.,FXD,CMPSN:5.6 OHM,5%,0.25W	01121	CB56G5
R300	315-0201-00			RES.,FXD,CMPSN:200 OHM,5%,0.25W	01121	CB2015
R301	308-0754-00			RES.,FXD,WW:5.55 OHM,0.5%,3W	91637	RS2B-D5R550D
R302	308-0720-01			RES.,FXD,WW:50 OHM,0.5%,3W	91637	RS2B-B50R00D
R305	321-0756-01			RES.,FXD,FILM:50K OHM,0.5%,0.125W	91637	MFF1816G50001D
R306	302-0334-00			RES.,FXD,CMPSN:330K OHM,10%,0.50W	01121	EB3341
R307	316-0393-00			RES.,FXD,CMPSN:39K OHM,10%,0.25W	01121	CB3931
R309	315-0203-00			RES.,FXD,CMPSN:20K OHM,5%,0.25W	01121	CB2035
R310	311-1559-00			RES.,VAR,NONWIR:10K OHM,20%,0.50W	73138	91A-10001M
R311	321-0995-00			RES.,FXD,FILM:549K OHM,1%,0.125W	91637	MFF1816G54902D
R312	321-0995-00			RES.,FXD,FILM:549K OHM,1%,0.125W	91637	MFF1816G54902D
R313	321-0260-00			RES.,FXD,FILM:4.99K OHM,1%,0.125W	75042	CEAT0-4991F
R315	311-1554-00			RES.,VAR,NONWIR:200K OHM,20%,0.50W	73138	91A-20002M
R316	316-0126-00			RES.,FXD,CMPSN:12M OHM,10%,0.25W	01121	CB1261
R317	316-0126-00			RES.,FXD,CMPSN:12M OHM,10%,0.25W	01121	CB1261
R318	315-0104-00			RES.,FXD,CMPSN:100K OHM,5%,0.25W	01121	CB1045
R321	308-0537-00			RES.,FXD,WW:1K OHM,0.5%,5W	91637	RS2A-B10000D
R322	322-0707-03			RES.,FXD,FILM:100.1K OHM,0.25%,0.25W	91637	MFF1421D10012C
R323	307-0430-00			RES.,FXD,CMPSN:11.1M OHM,1%,0.5W	03888	FL0.5-D11104F
R324	307-0429-00			RES.,FXD,CMPSN:100M OHM,1%,1W	03888	FL-1-F10005F
R329	321-0991-03			RES.,FXD,FILM:18K OHM,0.25%,0.125W	91637	MFF1816D18001C
R331	321-0222-03			RES.,FXD,FILM:2K OHM,0.25%,0.125W	75042	CEAT22KC
R333	315-0107-00			RES.,FXD,CMPSN:100M OHM,5%,0.25W	01121	CB1075
R340	311-1136-00			RES.,VAR,NONWIR:100K OHM,30%,0.25W	71450	201-YA5536

Ckt No.	Tektronix Part No.	Serial/Model No. Eff	Dscont	Name & Description	Mfr Code	Mfr Part Number
R341	316-0225-00			RES.,FXD,CMPSN:2.2M OHM,10%,0.25W	01121	CB2251
R342	316-0222-00			RES.,FXD,CMPSN:2.2K OHM,10%,0.25W	01121	CB2221
R343	321-0414-03			RES.,FXD,FILM:200K OHM,0.25%,0.125W	91637	MFF1816D20002C
R344	321-1609-03			RES.,FXD,FILM:2.02K OHM,0.25%,0.125W	91637	MFF1816D20200C
R345	321-1610-03			RES.,FXD,FILM:22.22K OHM,0.25%,0.125W	91637	MFF1816D22221C
R351	321-0289-03			RES.,FXD,FILM:10K OHM,0.25%,0.125W	75042	CEAT2-1002C
R352	315-0103-00			RES.,FXD,CMPSN:10K OHM,5%,0.25W	01121	CB1035
R361	321-0756-01			RES.,FXD,FILM:50K OHM,0.5%,0.125W	91637	MFF1816G50001D
R362	321-0756-01			RES.,FXD,FILM:50K OHM,0.5%,0.125W	91637	MFF1816G50001D
R363	321-0631-03			RES.,FXD,FILM:12.5K OHM,0.25W,0.125W	91637	MFF1816G12501C
R401	321-0334-00			RES.,FXD,FILM:29.4K OHM,1%,0.125W	75042	CEAT0-2942F
R402	321-0260-00			RES.,FXD,FILM:4.99K OHM,1%,0.125W	75042	CEAT0-4991F
R403	316-0102-00			RES.,FXD,CMPSN:1K OHM,10%,0.25W	01121	CB1021
R404	315-0303-00			RES.,FXD,CMPSN:30K OHM,5%,0.25W	01121	CB3035
R408	316-0103-00			RES.,FXD,CMPSN:10K OHM,10%,0.25W	01121	CB1031
R409	321-0287-00			RES.,FXD,FILM:9.53K OHM,1%,0.125W	75042	CEAT0-9531F
R410	311-1558-00			RES.,VAR,NONWIR:20K OHM,20%,0.50W	73138	91A-20001M
R411	321-0155-00			RES.,FXD,FILM:402 OHM,1%,0.125W	75042	CEAT0-4020F
R415	311-0555-00			RES.,VAR,NONWIR:10K OHM,20%,0.50W	01121	20M485
R421	307-0381-00			RES.,FXD,FILM:4.99M OHM,1%,0.5W	03888	FL1/2-4.99M-1%
R422	321-0452-00			RES.,FXD,FILM:499K OHM,1%,0.125W	75042	CEAT0-4993F
R423	321-0353-00			RES.,FXD,FILM:46.4K OHM,1%,0.125W	75042	CEAT0-4642F
R424	321-0449-00			RES.,FXD,FILM:464K OHM,1%,0.125W	75042	CEAT0-4643F
R426	321-0260-00			RES.,FXD,FILM:4.99K OHM,1%,0.125W	75042	CEAT0-4991F
R431	321-0463-00			RES.,FXD,FILM:649K OHM,1%,0.125W	91637	MFF1816G64902F
R432	321-0367-00			RES.,FXD,FILM:64.9K OHM,1%,0.125W	75042	CEAT0-6492F
R433	316-0333-00			RES.,FXD,CMPSN:33K OHM,10%,0.25W	01121	CB3331
R441	321-0196-00			RES.,FXD,FILM:1.07K OHM,1%,0.125W	75042	CEAT0-1071F
R442	321-0284-00			RES.,FXD,FILM:8.87K OHM,1%,0.125W	75042	CEAT0-8871F
R443	321-0160-00			RES.,FXD,FILM:453 OHM,1%,0.125W	75042	CEAT0-4530F
R444	321-0188-00			RES.,FXD,FILM:887 OHM,1%,0.125W	75042	CEAT0-8870F
R445	321-0197-00			RES.,FXD,FILM:1.1K OHM,1%,0.125W	75042	CEAT0-1101F
R446	321-0612-00			RES.,FXD,FILM:500 OHM,1%,0.125W	91637	MFF1816D5000F
R447	321-0263-00			RES.,FXD,FILM:5.36K OHM,1%,0.125W	75042	CEAT0-5361F
R448	321-0320-00			RES.,FXD,FILM:21K OHM,1%,0.125W	75042	CEAT0-2102F
R449	321-0370-00			RES.,FXD,FILM:69.8K OHM,1%,0.125W	75042	CEAT0-6982F
R451	321-0284-00			RES.,FXD,FILM:8.87K OHM,1%,0.125W	75042	CEAT0-8871F
R452	321-0196-00			RES.,FXD,FILM:1.07K OHM,1%,0.125W	75042	CEAT0-1071F
R453	321-0160-00			RES.,FXD,FILM:453 OHM,1%,0.125W	75042	CEAT0-4530F
R454	321-0188-00			RES.,FXD,FILM:887 OHM,1%,0.125W	75042	CEAT0-8870F
R455	321-0197-00			RES.,FXD,FILM:1.1K OHM,1%,0.125W	75042	CEAT0-1101F
R460[1]	311-1310-00			RES.,VAR,NONWIR:20K OHM,20%,1W	01121	10M654
R461	315-0514-00			RES.,FXD,CMPSN:510K OHM,5%,0.25W	01121	CB5145
R463	321-0289-00			RES.,FXD,FILM:10K OHM,1%,0.125W	75042	CEAT0-1002F
R464	321-0306-00			RES.,FXD,FILM:15K OHM,1%,0.125W	75042	CEAT0-1502F
R467	321-0289-00	B010100	B019999	RES.,FXD,FILM:10K OHM,1%,0.125W	75042	CEAT0-1002F
R467	321-0288-00	B020000		RES.,FXD,FILM:9.76K OHM,1%,0.125W	75042	CEAT0-9761F
R468	321-0268-00			RES.,FXD,FILM:6.04K OHM,1%,0.125W	75042	CEAT0-6041F
R469	315-0512-00			RES.,FXD,CMPSN:5.1K OHM,5%,0.25W	01121	CB5125
R471	315-0104-00			RES.,FXD,CMPSN:100K OHM,5%,0.25W	01121	CB1045
R472	315-0512-00			RES.,FXD,CMPSN:5.1K OHM,5%,0.25W	01121	CB5125
R473	308-0291-00			RES.,FXD,WW:2K OHM,5%,3W	91637	RS2B-B2000J
R474	316-0822-00			RES.,FXD,CMPSN:8.2K OHM,10%,0.25W	01121	CB8221

[1]Furnished as a unit with S460.

Ckt No.	Tektronix Part No.	Serial/Model No. Eff	Dscont	Name & Description	Mfr Code	Mfr Part Number
R475	315-0510-00			RES.,FXD,CMPSN:51 OHM,5%,0.25W	01121	CB5105
R476	315-0201-00			RES.,FXD,CMPSN:200 OHM,5%,0.25W	01121	CB2015
R477	315-0510-00			RES.,FXD,CMPSN:51 OHM,5%,0.25W	01121	CB5105
R478	315-0512-00			RES.,FXD,CMPSN:5.1K OHM,5%,0.25W	01121	CB5125
R479	301-0111-00			RES.,FXD,CMPSN:110 OHM,5%,0.50W	01121	EB1115
R481	321-0756-03			RES.,FXD,FILM:50K OHM,0.25%,0.125W	75042	CEAT2-5002C
R482	315-0512-00			RES.,FXD,CMPSN:5.1K OHM,5%,0.25W	01121	CB5125
R483	315-0150-00			RES.,FXD,CMPSN:15 OHM,5%,0.25W	01121	CB1505
R484	315-0201-00			RES.,FXD,CMPSN:200 OHM,5%,0.25W	01121	CB2015
R485	315-0151-00			RES.,FXD,CMPSN:150 OHM,5%,0.25W	01121	CB1515
R486	308-0764-00			RES.,FXD,WW:2.7 OHM,5%,2W	75042	BWF2R70F
R492	316-0123-00			RES.,FXD,CMPSN:12K OHM,10%,0.25W	01121	CB1231
R521	316-0106-00			RES.,FXD,CMPSN:10M OHM,10%,0.25W	01121	CB1061
R522	316-0222-00			RES.,FXD,CMPSN:2.2K OHM,10%,0.25W	01121	CB2221
R526	316-0224-00			RES.,FXD,CMPSN:220K OHM,10%,0.25W	01121	CB2241
R527	321-0356-00			RES.,FXD,FILM:49.9K OHM,1%,0.125W	75042	CEAT0-4992F
R531	316-0473-00			RES.,FXD,CMPSN:47K OHM,10%,0.25W	01121	CB4731
R533	316-0473-00			RES.,FXD,CMPSN:47K OHM,10%,0.25W	01121	CB4731
R535	315-0152-00			RES.,FXD,CMPSN:1.5K OHM,5%,0.25W	01121	CB1525
R536	315-0101-00			RES.,FXD,CMPSN:100 OHM,5%,0.25W	01121	CB1015
R537	315-0101-00			RES.,FXD,CMPSN:100 OHM,5%,0.25W	01121	CB1015
R538	315-0152-00			RES.,FXD,CMPSN:1.5K OHM,5%,0.25W	01121	CB1525
R541	315-0242-00			RES.,FXD,CMPSN:2.4K OHM,5%,0.25W	01121	CB2425
R542	315-0243-00			RES.,FXD,CMPSN:24K OHM,5%,0.25W	01121	CB2435
R546	315-0201-00			RES.,FXD,CMPSN:200 OHM,5%,0.25W	01121	CB2015
R548	315-0201-00			RES.,FXD,CMPSN:200 OHM,5%,0.25W	01121	CB2015
R549	321-0452-00			RES.,FXD,FILM:499K OHM,1%,0.125W	75042	CEAT0-4993F
R551	321-0356-00	B010100	B019999	RES.,FXD,FILM:49.9K OHM,1%,0.125W	75042	CEAT0-4992F
R551	321-0756-01	B020000		RES.,FXD,FILM:50K OHM,0.5%,0.125W	91637	MFF1816G50001D
R552	321-0631-00			RES.,FXD,FILM:12.5K OHM,1%,0.125W	75042	CEAT0-1252F
R554	321-0289-00			RES.,FXD,FILM:10K OHM,1%,0.125W	75042	CEAT0-1002F
R560	311-1150-00			RES.,VAR,WW:10K OHM,5%	73138	7366-60-1
R562	311-1559-00			RES.,VAR,NONWIR:10K OHM,20%,0.50W	73138	91A-10001M
R563	321-0354-00			RES.,FXD,FILM:47.5K OHM,1%,0.125W	75042	CEAT0-4752F
R565[1]	311-1518-00			RES.,VAR,NONWIR:10K OHM,20%,1W	01121	11M324
R566	321-0198-00			RES.,FXD,FILM:1.13K OHM,1%,0.125W	75042	CEAT0-1131F
R567	321-0260-00			RES.,FXD,FILM:4.99K OHM,1%,0.125W	75042	CEAT0-4991F
R570	321-0364-00	B010100	B019999	RES.,FXD,FILM:60.4K OHM,1%,0.125W	75042	CEAT0-6042F
R570	321-0720-03	B020000		RES.,FXD,FILM:60K OHM,0.25%,0.125W	91637	MFF1816D6002C
R571	321-0289-00			RES.,FXD,FILM:10K OHM,1%,0.125W	75042	CEAT0-1002F
R572	315-0512-00			RES.,FXD,CMPSN:5.1K OHM,5%,0.25W	01121	CB5125
R573	308-0291-00			RES.,FXD,WW:2K OHM,5%,3W	91637	RS2B-B2000J
R574	321-0289-03			RES.,FXD,FILM:10K OHM,0.25%,0.125W	75042	CEAT2-1002C
R575	315-0510-00			RES.,FXD,CMPSN:51 OHM,5%,0.25W	01121	CB5105
R576	315-0201-00			RES.,FXD,CMPSN:200 OHM,5%,0.25W	01121	CB2015
R577	315-0510-00			RES.,FXD,CMPSN:51 OHM,5%,0.25W	01121	CB5105
R578	315-0512-00			RES.,FXD,CMPSN:5.1K OHM,5%,0.25W	01121	CB5125
R579	301-0111-00			RES.,FXD,CMPSN:110 OHM,5%,0.50W	01121	EB1115
R581	321-0720-03			RES.,FXD,FILM:60K OHM,0.25%,0.125W	91637	MFF1816D6002C
R582	315-0512-00			RES.,FXD,CMPSN:5.1K OHM,5%,0.25W	01121	CB5125
R583	315-0150-00			RES.,FXD,CMPSN:15 OHM,5%,0.25W	01121	CB1505
R584	315-0201-00			RES.,FXD,CMPSN:200 OHM,5%,0.25W	01121	CB2015
R585	315-0151-00			RES.,FXD,CMPSN:150 OHM,5%,0.25W	01121	CB1515

[1]Furnished as a unit with S565.

Ckt No.	Tektronix Part No.	Serial/Model No. Eff	Dscont	Name & Description	Mfr Code	Mfr Part Number
R586	308-0764-00			RES.,FXD,WW:2.7 OHM,5%,2W	75042	BWF2R70F
R592	316-0123-00			RES.,FXD,CMPSN:12K OHM,10%,0.25W	01121	CB1231
S30	260-1641-00			SWITCH,SLIDE:DPDT,0.5A,125VAC	10389	23-021-114
S120	263-1027-00			DRUM ASSY,CAM S:LOAD RESISTANCE	80009	263-1027-00
S130	263-1026-00			DRUM ASSY,CAM S:SOURCE RESISTANCE	80009	263-1026-00
S140	105-0467-00			ACTUATOR,SWITCH:	80009	105-0467-00
S200A,B	260-1310-00			SWITCH,PUSH:DISPLAY	71590	2KAA001000-437
S300	263-1025-00			DRUM ASSY,CAM S:FUNCTION	80009	263-1025-00
S350	263-1024-00			DRUM ASSY,CAM S:VERTICAL UNITS/DIV	80009	263-1024-00
S420	260-1529-00			SWITCH,ROTARY:	76854	5-18252-142
S441	260-0247-00			SWITCH,PUSH:SPST,CS ENABLE	81073	30YY1009
S460[1]	311-1310-00			RES.,VAR,NONWIR:20K OHM,20%,1W	01121	10M654
S565[2]	311-1518-00			RES.,VAR,NONWIR:10K OHM,20%,1W	01121	11M324
U16	156-0067-00	B010100	B030709	MICROCIRCUIT,LI:OPERATIONAL AMPLIFIER	80009	156-0067-00
U16	156-0105-00	B030710		MICROCIRCUIT,LI:OPERATIONAL AMPLIFIER	27014	LM301AN
U250	156-0400-00			MICROCIRCUIT,LI:OPERATIONAL AMPLIFIER	04713	MC1436CG
U340	156-0158-00			MICROCIRCUIT,LI:DUAL OPERATIONAL AMPLIFIER	18324	S5558V
U350	156-0158-00			MICROCIRCUIT,LI:DUAL OPERATIONAL AMPLIFIER	18324	S5558V
U424	156-0200-00			MICROCIRCUIT,LI:LOW INPUT/OFFSET CURRENT	18324	N5556V
U432	156-0158-00			MICROCIRCUIT,LI:DUAL OPERATIONAL AMPLIFIER	18324	S5558V
U460	156-0158-00			MICROCIRCUIT,LI:DUAL OPERATIONAL AMPLIFIER	18324	S5558V
U476	156-0400-00			MICROCIRCUIT,LI:OPERATIONAL AMPLIFIER	04713	MC1436CG
U540	156-0067-00			MICROCIRCUIT,LI:OPERATIONAL AMPLIFIER	80009	156-0067-00
U576	156-0400-00			MICROCIRCUIT,LI:OPERATIONAL AMPLIFIER	04713	MC1436CG
VR121	152-0243-00			SEMICOND DEVICE:ZENER,0.4W,15V,5%	81483	1N965B
VR238	152-0278-00			SEMICOND DEVICE:ZENER,0.4W,3V,5%	07910	1N4372A
VR239	152-0278-00			SEMICOND DEVICE:ZENER,0.4W,3V,5%	07910	1N4372A
VR268	152-0278-00			SEMICOND DEVICE:ZENER,0.4W,3V,5%	07910	1N4372A
VR269	152-0278-00			SEMICOND DEVICE:ZENER,0.4W,3V,5%	07910	1N4372A
VR281	152-0508-00			SEMICOND DEVICE:ZENER,0.4W,12.5V,5%	80009	152-0508-00
VR472	152-0280-00			SEMICOND DEVICE:ZENER,0.4W,6.2V,5%	04713	1N753A
VR572	152-0280-00			SEMICOND DEVICE:ZENER,0.4W,6.2V,5%	04713	1N753A

[1]Furnished as a unit with R460.
[2]Furnished as a unit with R565.

DIAGRAMS AND CIRCUIT BOARD ILLUSTRATIONS

Symbols and Reference Designators

Electrical components shown on the diagrams are in the following units unless noted otherwise:

Capacitors = Values one or greater are in picofarads (pF).
Values less than one are in microfarads (μF).

Resistors = Ohms (Ω).

Symbols used on the diagrams are based on ANSI Standard Y32.2-1975.

Logic symbology is based on ANSI Y32.14-1973 in terms of positive logic. Logic symbols depict the logic function performed and may differ from the manufacturer's data.

The following prefix letters are used as reference designators to identify components or assemblies on the diagrams.

A	Assembly, separable or repairable (circuit board, etc.)
AT	Attenuator, fixed or variable
B	Motor
BT	Battery
C	Capacitor, fixed or variable
CB	Circuit breaker
CR	Diode, signal or rectifier
DL	Delay line
DS	Indicating device (lamp)
E	Spark Gap
F	Fuse
FL	Filter
H	Heat dissipating device (heat sink, heat radiator, etc.)
HR	Heater
HY	Hybrid circuit
J	Connector, stationary portion
K	Relay
L	Inductor, fixed or variable
M	Meter
P	Connector, movable portion
Q	Transistor or silicon-controlled rectifier
R	Resistor, fixed or variable
RT	Thermistor
S	Switch or contactor
T	Transformer
TC	Thermocouple
TP	Test point
U	Assembly, inseparable or non-repairable (integrated circuit, etc.)
V	Electron tube
VR	Voltage regulator (zener diode, etc.)
W	Wirestrap or cable
Y	Crystal
Z	Phase shifter

The following special symbols are used on the diagrams:

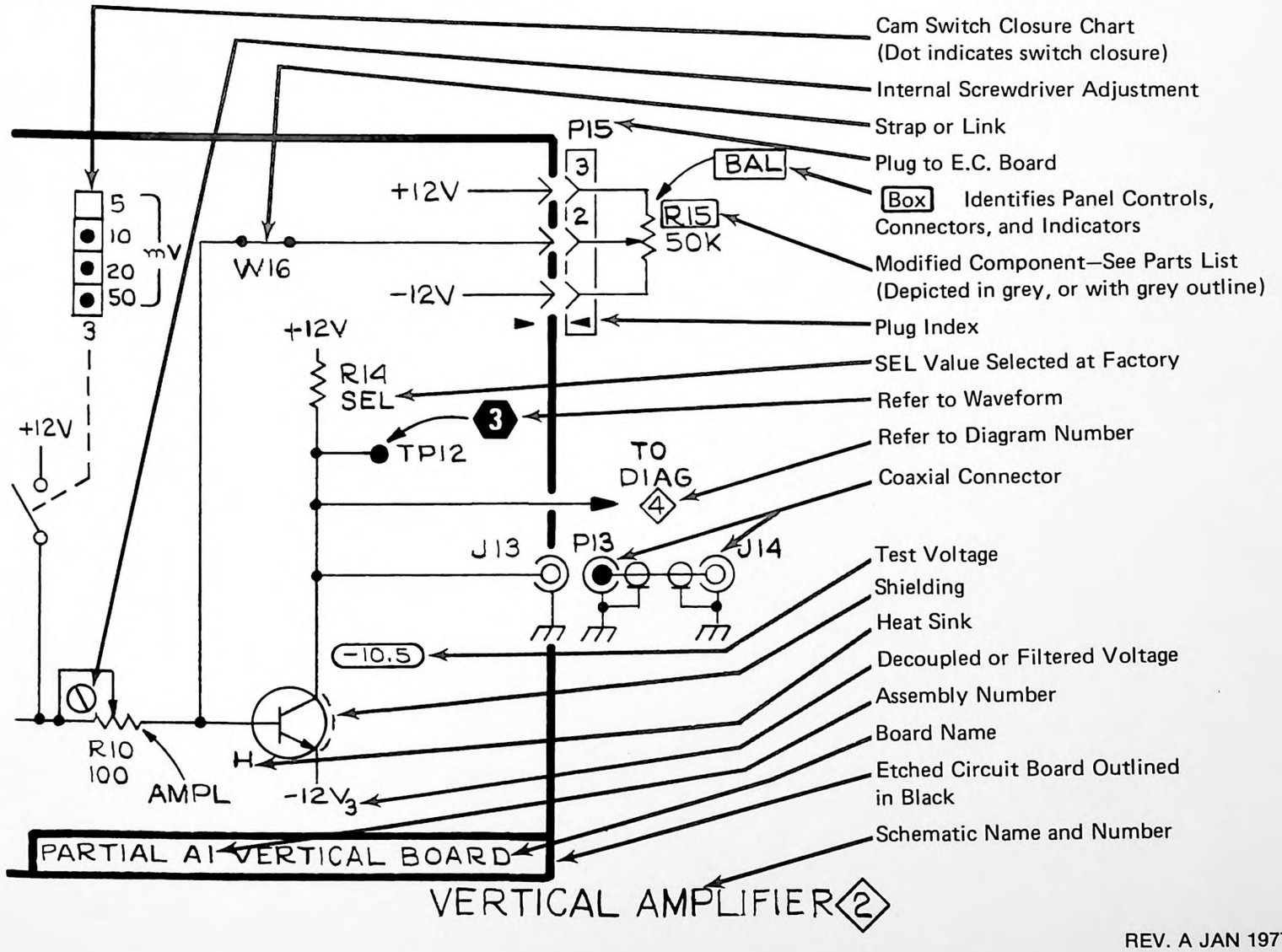

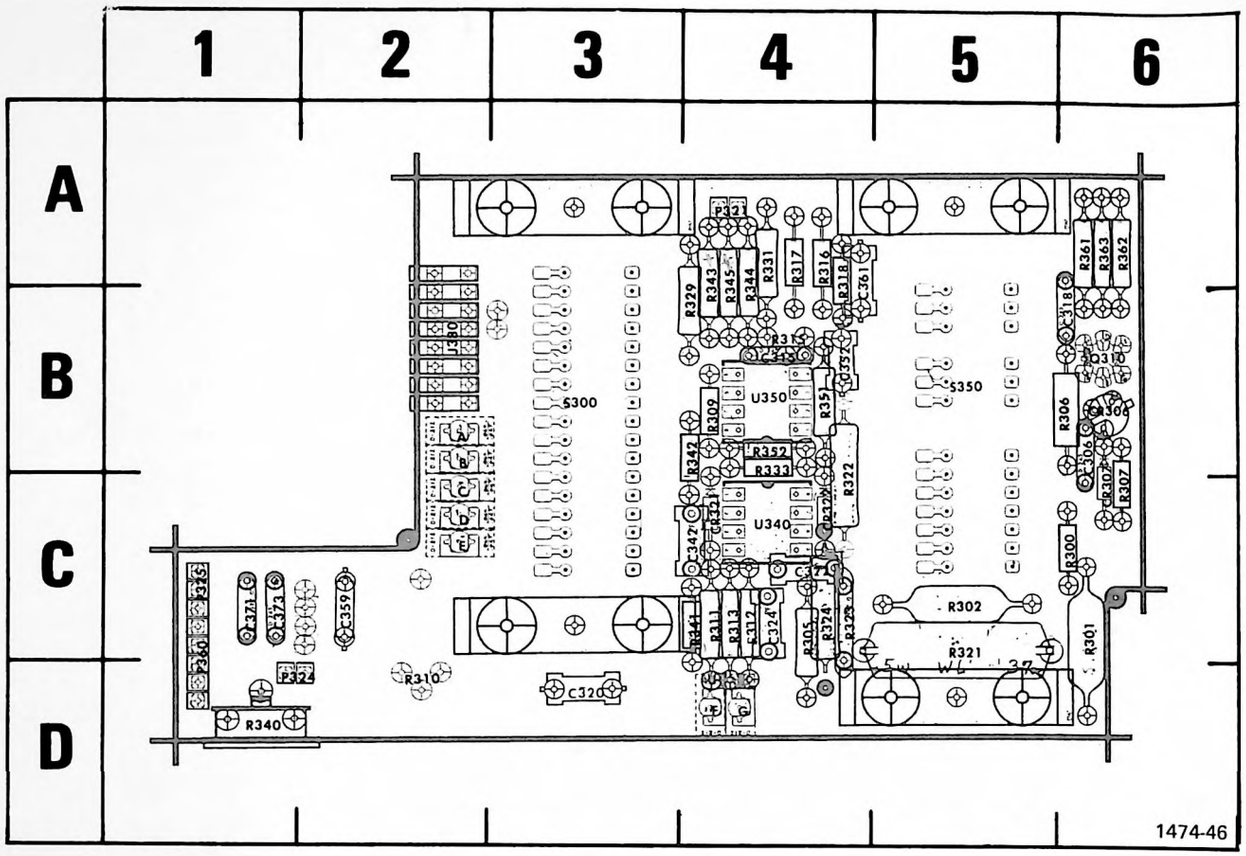

Fig. 7-1. A2—Vertical Preamp circuit board.

CKT NO	GRID LOC	CKT NO	GRID LOC	CKT NO	GRID LOC	CKT NO	GRID LOC	CKT NO	GRID LOC
C306	6B	CR306	6B	R300	6C	R317	4A	R344	4A
C315	4B	CR307	6C	R301	6C	R318	4A	R345	4A
C318	6B	CR321	4C	R302	5C	R321	5C	R351	4B
C322	4C	CR322	4C	R305	4C	R322	4C	R352	4B
C320	3D	J380	2B	R306	6B	R323	4C	R361	6A
C324	4C			R307	6C	R324	4C	R362	6A
C342	4C	P321	4A	R309	4B	R329	4B	R363	6A
C352	4B	P324	1D	R310	2D	R331	4A		
C359	2C	P325	1C	R311	4C	R333	4B	S300	3B
C361	4A	P360	1C	R312	4C	R340	1D	S350	5B
C371	1C			R313	4C	R341	4C		
C373	1C	Q310	6B	R315	4B	R342	4B	U340	4C
				R316	4A	R343	4A	U350	4B

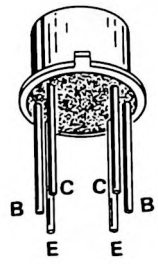

METAL-CASED TRANSISTORS

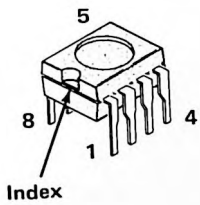

INTEGRATED CIRCUITS

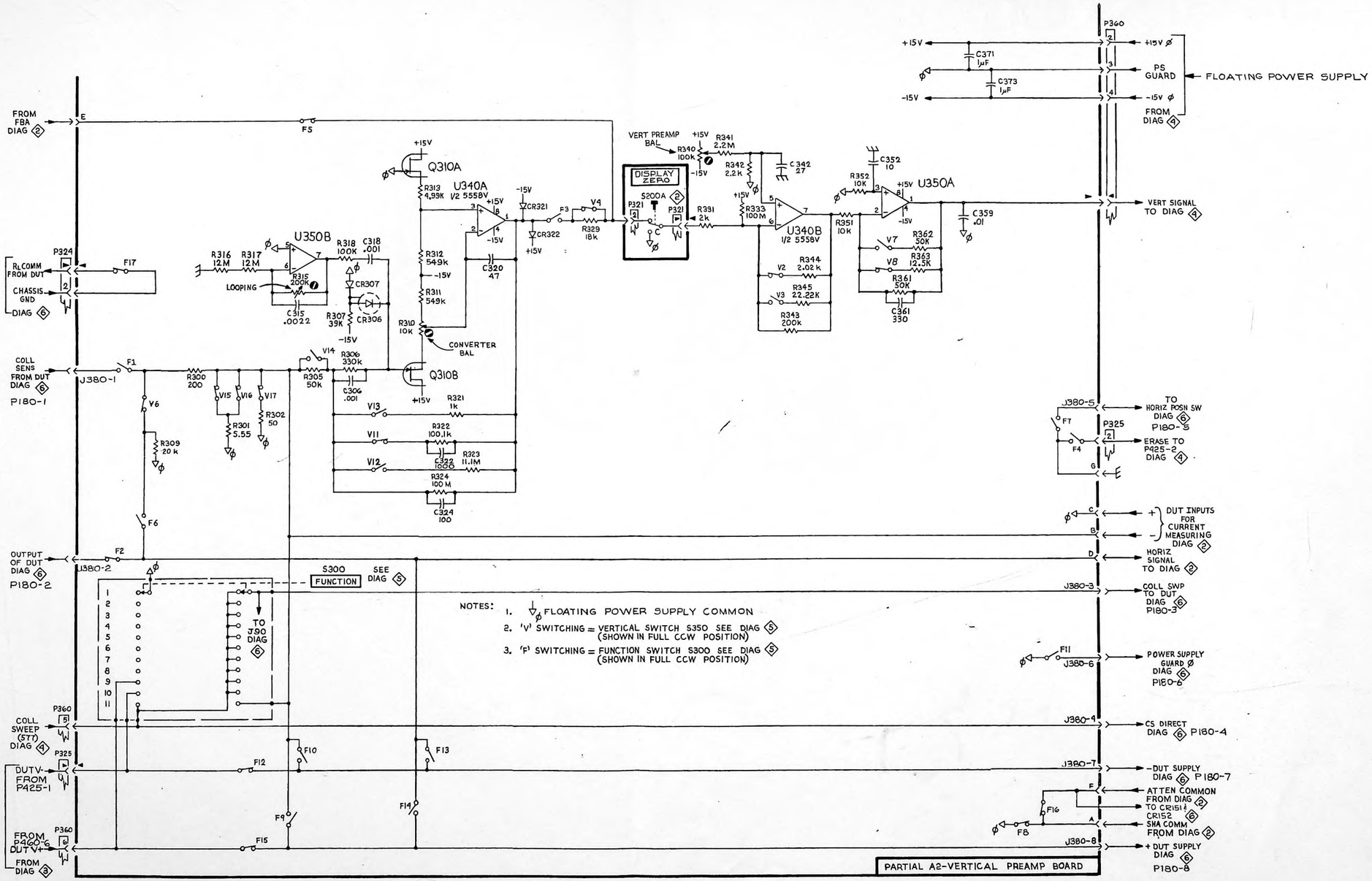

17B LINEAR IC TEST FIXTURE

1474-52
REV. B, JAN 1977

VERTICAL PREAMP 1

ASSEMBLY A3

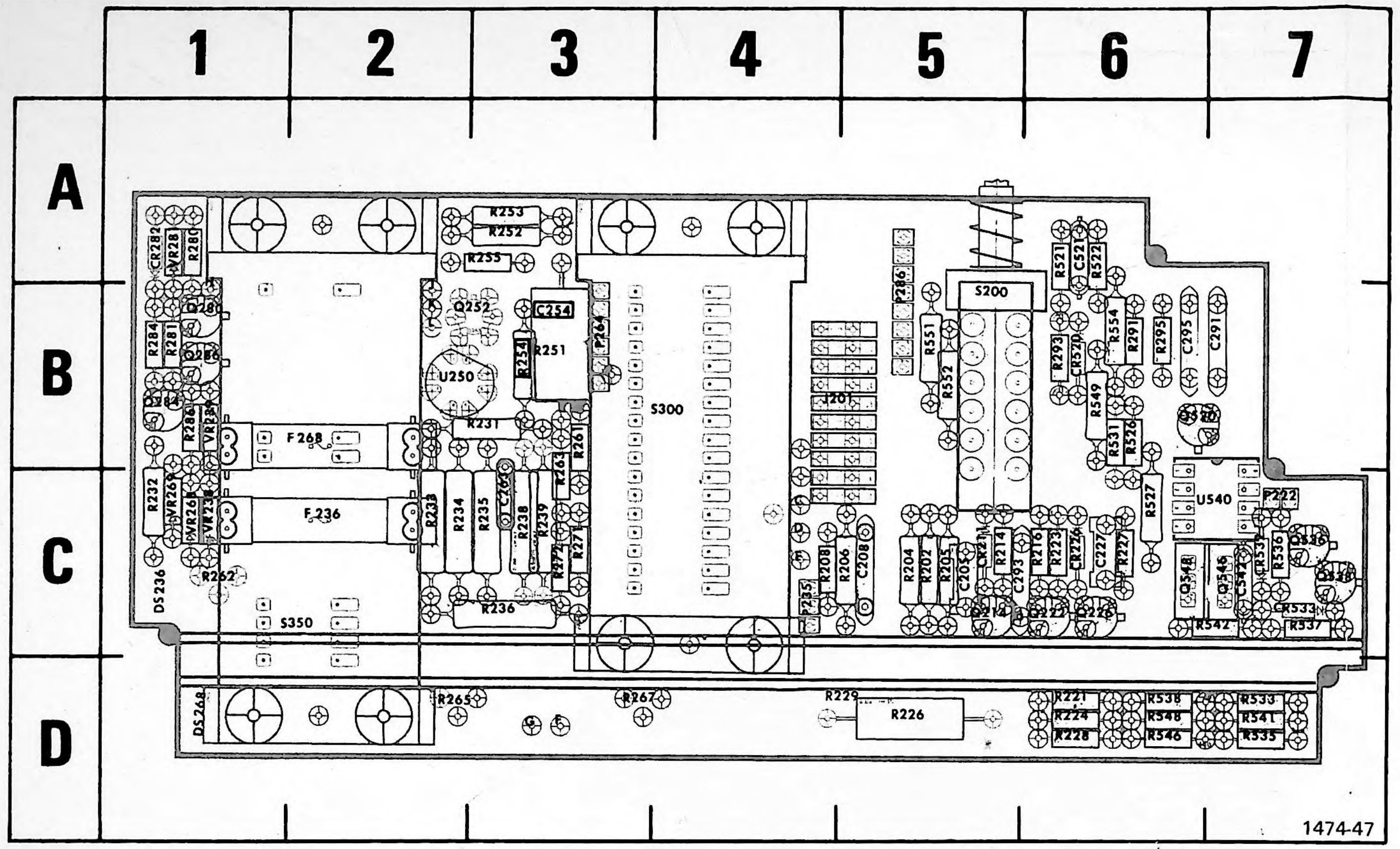

Fig. 7-2. A3—Feedback Amplifier circuit board.

CKT NO	GRID LOC	CKT NO	GRID LOC	CKT NO	GRID LOC	CKT NO	GRID LOC	CKT NO	GRID LOC	CKT NO	GRID LOC	CKT NO	GRID LOC
C205	5C	DS236	1C	Q280	1B	R223	6C	R254	3B	R522	6A	R554	6B
C208	5C	DS268	1D	Q284	1B	R224	6D	R255	3A	R525	5B		
C227	6C			Q286	1B	R226	5D	R261	3B	R526	6B	S200	5B
C254	3B	F236	2C	Q520	6B	R227	6C	R262	1C	R527	6C	S300	4B
C263	3C	F268	2B	Q536	7C	R228	6D	R263	3B	R531	6B	S350	2C
C291	7B			Q538	7C	R229	5D	R265	2D	R533	7D		
C293	5C	J201	5B	Q546	7C	R231	3B	R267	3D	R535	7D	U250	2B
C295	6B			Q548	6C	R232	1C	R271	3C	R536	7C	U540	7C
C521	6A	P222	7C			R233	2C	R272	3C	R537	7C		
C542	7C	P235	4C	R202	5C	R234	2C	R280	1A	R538	6D	VR238	1C
		P264	3B	R204	5C	R235	3C	R281	1B	R541	7D	VR239	1B
CR211	5C	P286	5B	R205	5C	R236	3C	R284	1B	R542	7C	VR268	1C
CR226	6C			R206	5C	R238	3C	R286	1B	R546	6D	VR269	1C
CR250	6B	Q214	5C	R208	4C	R239	3C	R291	6B	R548	6D	VR281	1A
CR282	1A	Q222	6C	R214	5C	R251	3B	R293	6B	R549	6B		
CR532	7C	Q226	6C	R216	6C	R252	3A	R295	6B	R551	5B		
CR533	7C	Q252	3B	R221	6D	R253	3A	R521	6A	R552	5B		

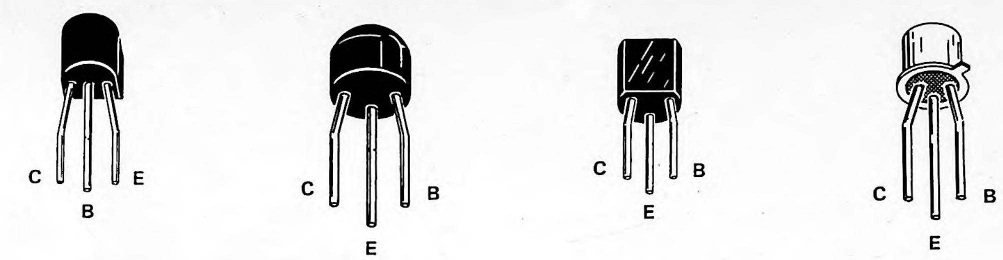

TRANSISTORS

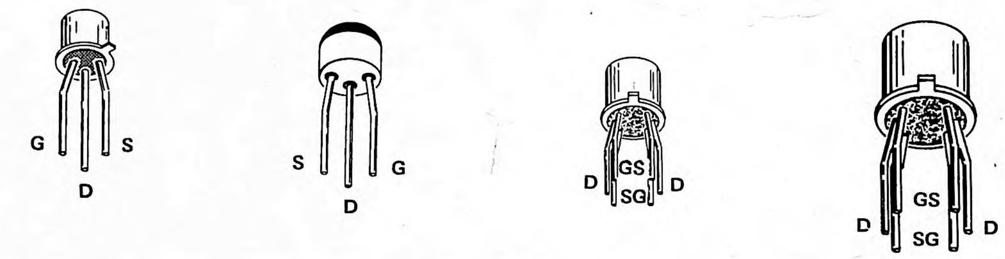

FIELD EFFECT TRANSISTORS

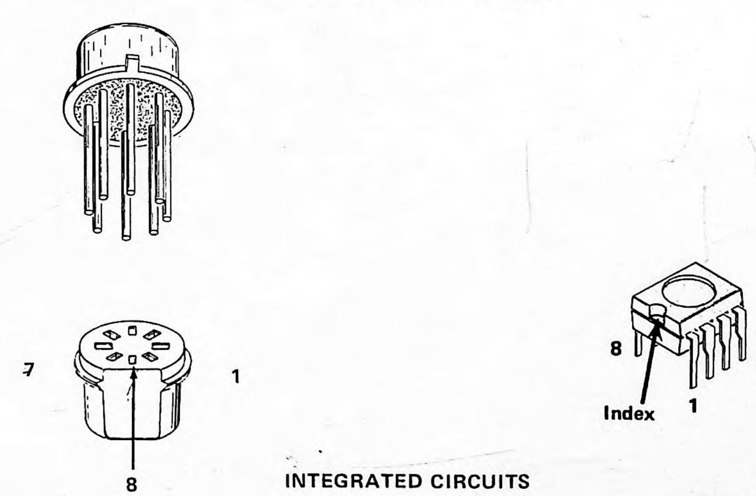

INTEGRATED CIRCUITS

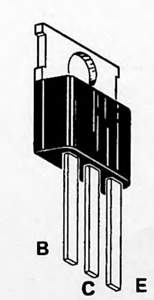

POWER TRANSISTORS

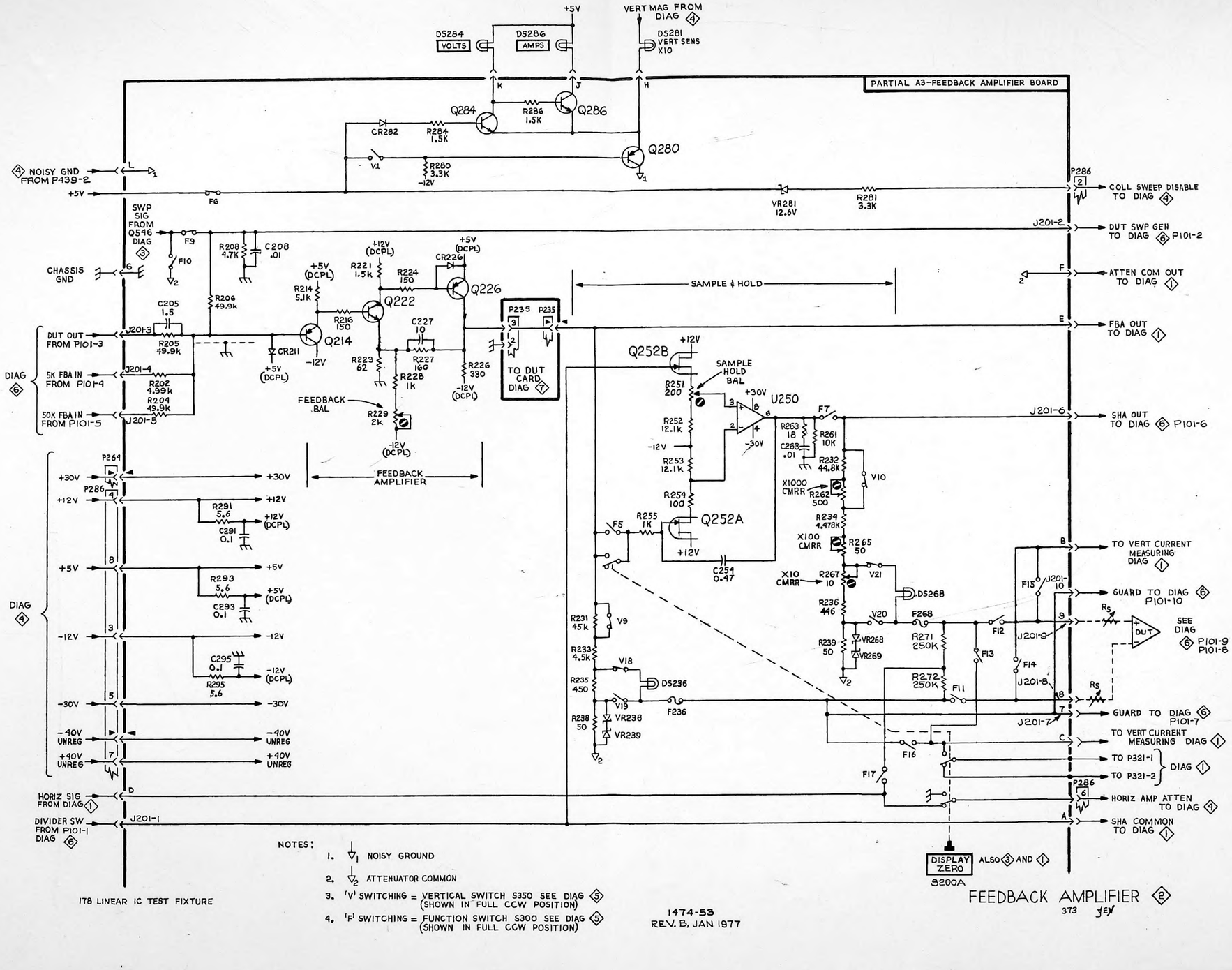

NOTES:

1. ▽1 NOISY GROUND
2. ▽2 ATTENUATOR COMMON
3. 'V' SWITCHING = VERTICAL SWITCH S350 SEE DIAG 5 (SHOWN IN FULL CCW POSITION)
4. 'F' SWITCHING = FUNCTION SWITCH S300 SEE DIAG 5 (SHOWN IN FULL CCW POSITION)

1474-53
REV. B, JAN 1977

FEEDBACK AMPLIFIER 2

373 YEN

FEEDBACK AMP 2

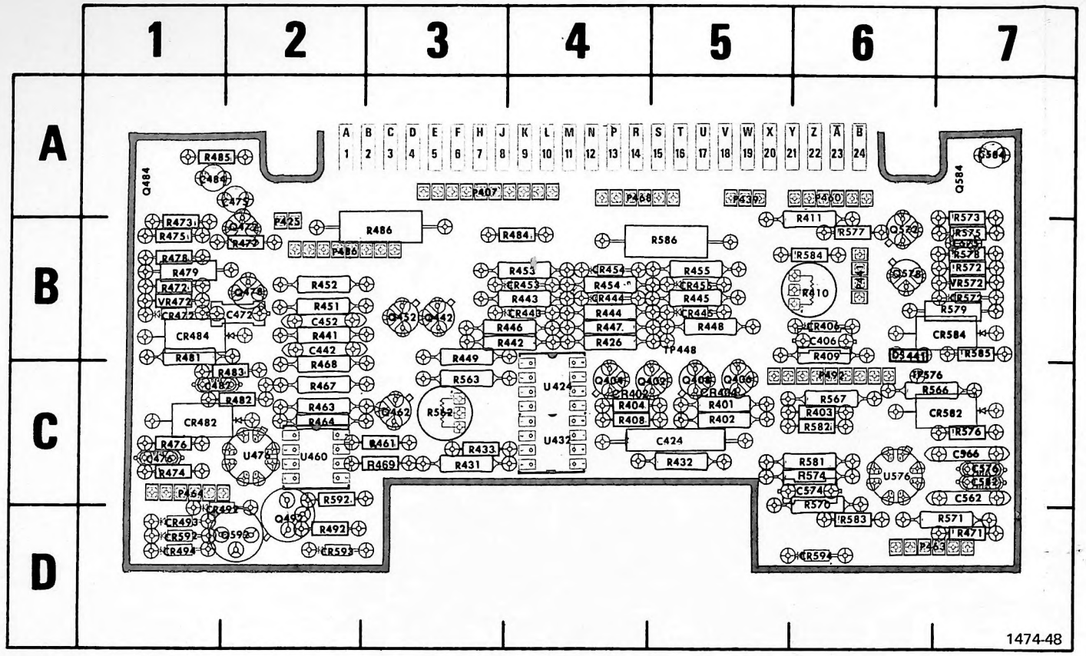

Fig. 7-3. A4—Power Supply circuit board.

CKT NO	GRID LOC	CKT NO	GRID LOC	CKT NO	GRID LOC	CKT NO	GRID LOC	CKT NO	GRID LOC	CKT NO	GRID LOC	CKT NO	GRID LOC
C406	6B	CR453	4B	P463	6D	R401	5C	R452	2B	R484	4B	R585	7B
C424	5C	CR454	4B	P464	1C	R402	5C	R453	4B	R485	1A	R586	5B
C442	2B	CR455	5B	P468	4A	R403	6C	R454	4B	R486	3B	R592	2C
C452	2B	CR472	1B	P486	2B	R404	4C	R455	5B	R492	2D		
C472	2B	CR482	1C	P492	6C	R408	4C	R461	3C	R562	3C	TP448	5B
C475	2A	CR484	1B			R409	6B	R463	2C	R563	3C	TP576	6C
C476	1C	CR492	2D	Q402	5C	R410	6B	R464	2C	R566	7C		
C482	1C	CR493	1D	Q404	4C	R411	6A	R467	2C	R567	6C	U424	4C
C484	1A	CR494	1D	Q406	5C	R426	4B	R468	2C	R570	6C	U432	4C
C562	7C	CR572	7B	Q408	5C	R431	3C	R469	3C	R571	7D	U460	2C
C566	7C	CR582	7C	Q442	3B	R432	5C	R471	7D	R572	7B	U476	2C
C574	6C	CR584	7B	Q452	3B	R433	3C	R472	1B	R573	7A	U576	6C
C575	7B	CR593	2D	Q462	3C	R441	2B	R473	1B	R574	6C		
C576	7C	CR592	1D	Q472	2B	R442	4B	R474	1C	R575	7B	VR472	1B
C582	7C	CR594	6D	Q478	2B	R443	4B	R475	1B	R576	7C	VR572	7B
C584	7A	DS441	6B	Q484	1A	R444	4B	R476	1C	R577	6B		
CR404	5C			Q492	2D	R445	5B	R477	2B	R578	7B		
CR402	4C	P407	3A	Q572	6B	R446	4B	R478	1B	R579	7B		
CR406	6B	P425	2B	Q578	6B	R447	4B	R479	1B	R581	6C		
CR443	4B	P439	5A	Q584	7A	R448	5B	R481	1B	R582	6C		
CR444	4B	P441	6B	Q592	2D	R449	3B	R482	2C	R583	6D		
CR445	5B	P460	6A			R451	2B	R483	2C	R584	6B		

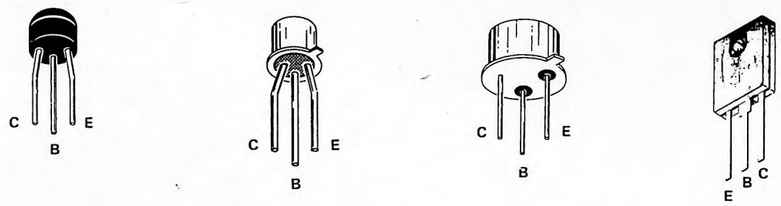

TRANSISTORS

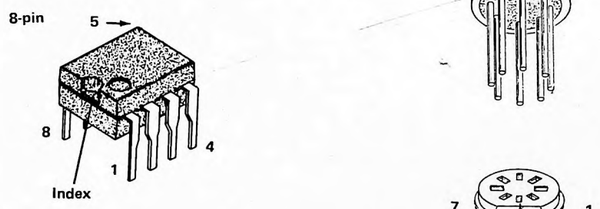

INTEGRATED CIRCUITS

ASSEMBLY A4

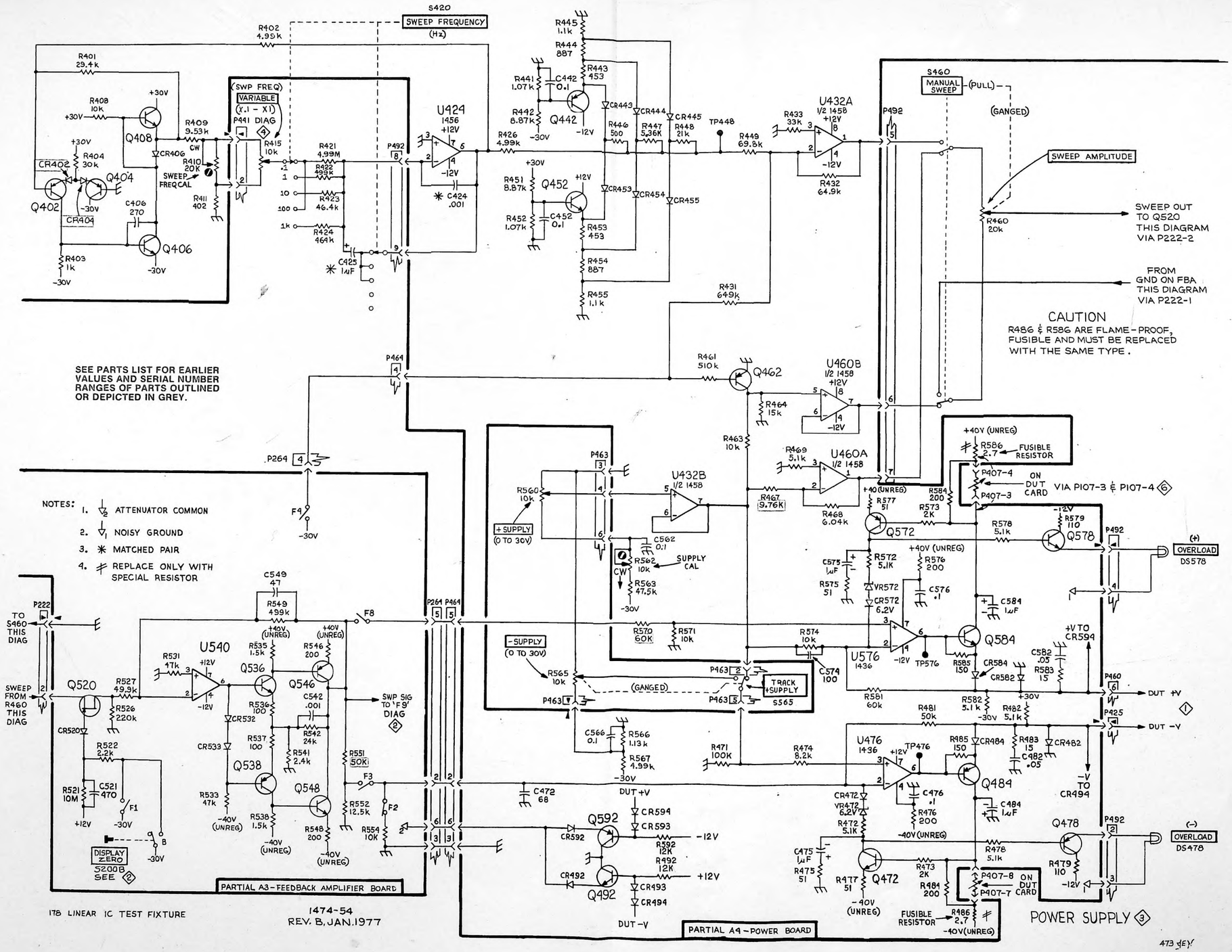

S420
SWEEP FREQUENCY
(Hz)
(SWP FREQ)
VARIABLE
(X.1 - X1)
P441 DIAG
SWEEP FREQ CAL
U424
1456
U432A
1/2 1458
U432B
1/2 1458
U460B
1/2 1458
U460A
1/2 1458
U540
U576
1436
U476
1436
S460
MANUAL SWEEP
(PULL)
(GANGED)
SWEEP AMPLITUDE
SWEEP OUT TO Q520 THIS DIAGRAM VIA P222-2
FROM GND ON FBA THIS DIAGRAM VIA P222-1
CAUTION
R486 & R586 ARE FLAME-PROOF, FUSIBLE AND MUST BE REPLACED WITH THE SAME TYPE.
SEE PARTS LIST FOR EARLIER VALUES AND SERIAL NUMBER RANGES OF PARTS OUTLINED OR DEPICTED IN GREY.
NOTES:
1. ATTENUATOR COMMON
2. NOISY GROUND
3. MATCHED PAIR
4. REPLACE ONLY WITH SPECIAL RESISTOR
+SUPPLY (0 TO 30V)
-SUPPLY (0 TO 30V)
SUPPLY CAL
TRACK +SUPPLY
S565
FUSIBLE RESISTOR
ON DUT CARD
VIA P107-3 & P107-4
OVERLOAD
DS578
DS478
DUT +V
DUT -V
TO S460 THIS DIAG
SWEEP FROM R460 THIS DIAG
SWP SIG TO 'F9' DIAG
DISPLAY ZERO
S200B SEE
PARTIAL A3-FEEDBACK AMPLIFIER BOARD
PARTIAL A4-POWER BOARD
POWER SUPPLY
178 LINEAR IC TEST FIXTURE
1474-54
REV. B, JAN. 1977
473 JEY

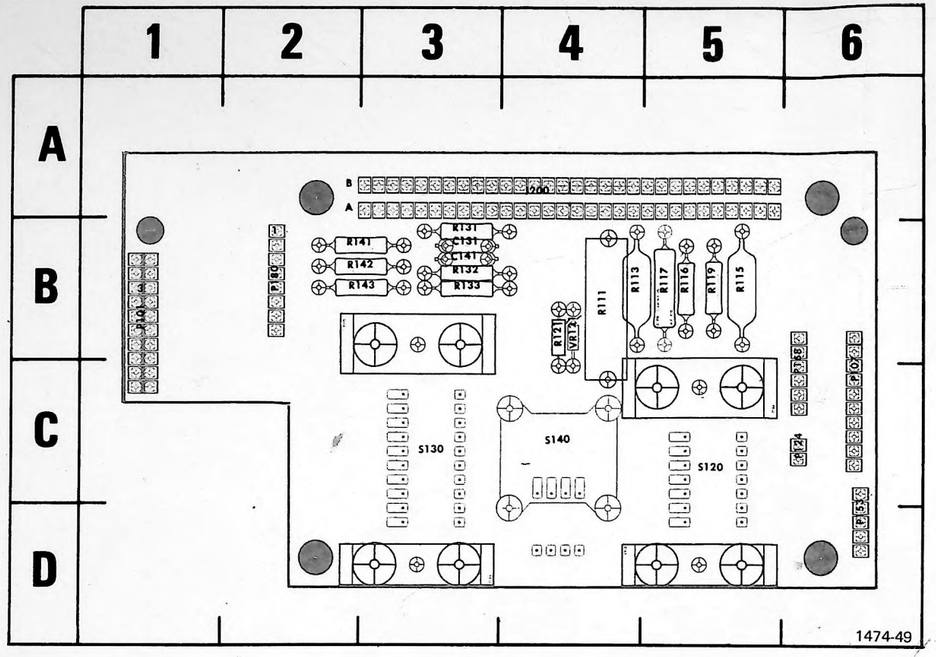

Fig. 7-4. A1—Interface circuit board.

CKT NO	GRID LOC	CKT NO	GRID LOC
C131	3B	R115	5B
C141	3B	R119	5B
		R121	4B
J200	4A	R131	3B
		R132	3B
P101	1B	R133	3B
P107	6C	R141	2B
P124	6C	R142	2B
P153	6D	R143	2B
P168	6C		
P180	2B	S120	5C
		S130	3C
R111	4B	S140	4C
R113	4B		
R116	5B	VR121	4B
R117	5B		

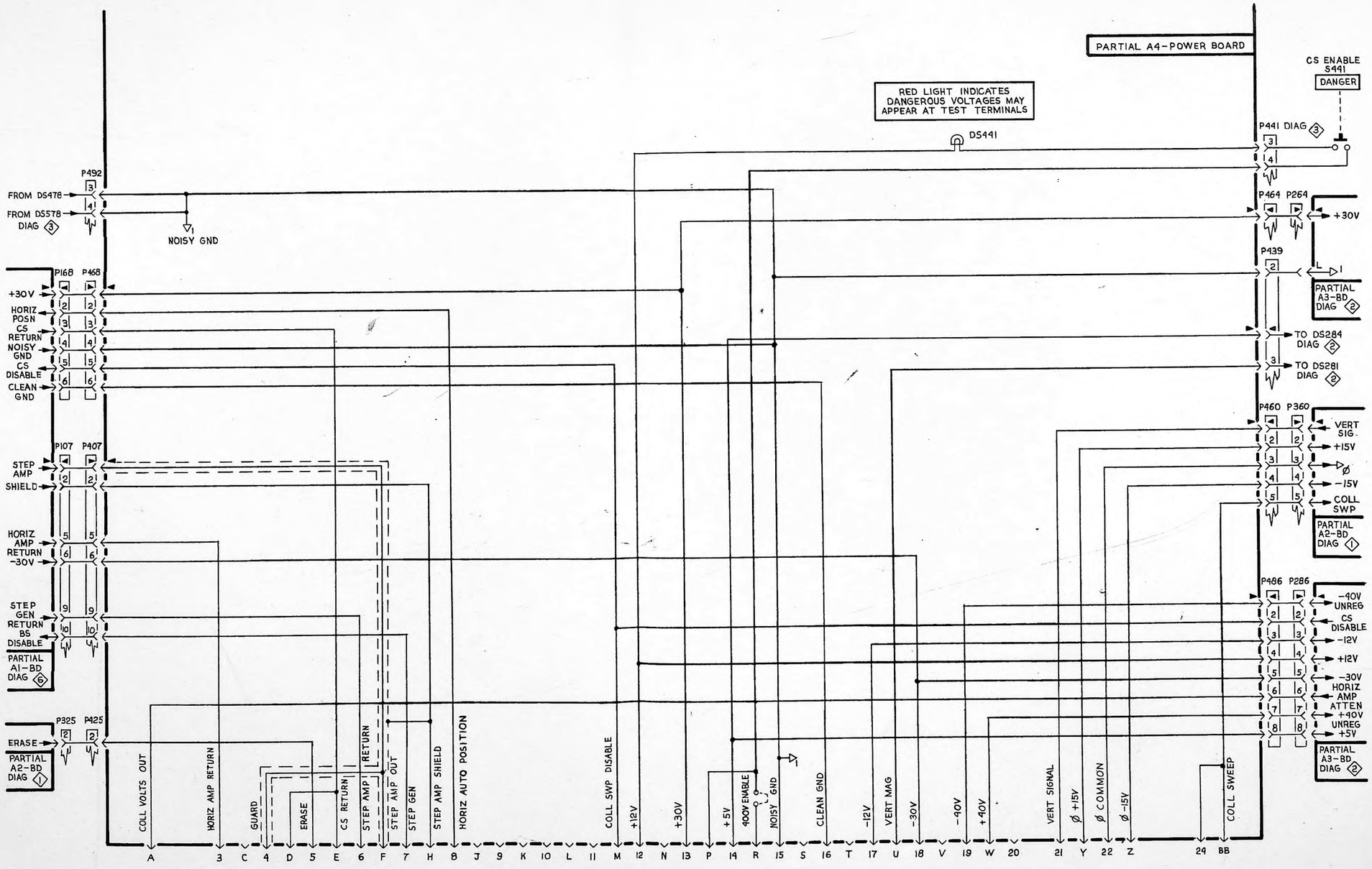

178 LINEAR IC TEST FIXTURE

1474-55
REV. B, JAN. 1977

INTERCONNECTING DIAGRAM 4

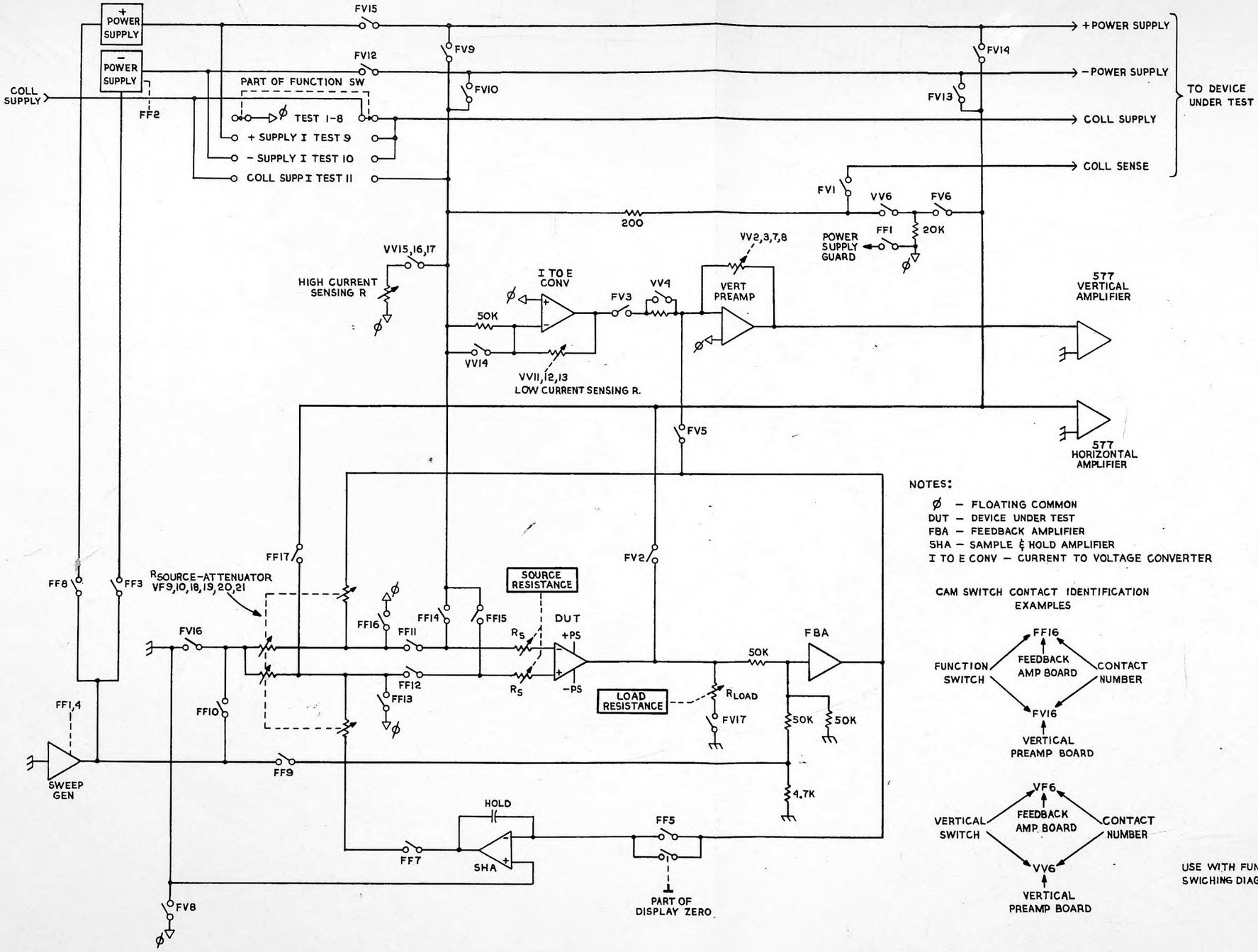

NOTES:

- Ø — FLOATING COMMON
- DUT — DEVICE UNDER TEST
- FBA — FEEDBACK AMPLIFIER
- SHA — SAMPLE & HOLD AMPLIFIER
- I TO E CONV — CURRENT TO VOLTAGE CONVERTER

CAM SWITCH CONTACT IDENTIFICATION EXAMPLES

USE WITH FUNCTION/VERTICAL SWICHING DIAGRAM

178 LINEAR TEST FIXTURE

1474-57
REV. B. JAN 1977

SWITCHING BLOCK DIAGRAM
(WITH STANDARD OP-AMP CARD)

P.S 8-8-73

AMPLIFIER
OFFSET V CCW 1
+INPUT I 2
-INPUT I 3
CMRR 4
GAIN 5
+PSRR 6
-PSRR 7
±PSRR 8
+SUPPLY I 9
-SUPPLY I 10
COLLECTOR SUPPLY I 11
SWITCH SHOWN IN 1 POSITION (FULL CCW)
S300
FUNCTION
SEE DIAG 1 FOR DETAILS
* DOT ON LINES INDICATES SWITCH CLOSED BETWEEN POSITIONS
PARTIAL A3-FEEDBACK AMPLIFIER BOARD
PARTIAL A2-VERTICAL PREAMP BOARD
SEE DIAG 1
NOTES:
1. ATTENUATOR COMMON
2. POWER SUPPLY GUARD
SWITCH SHOWN IN mV POSITION (FULL CCW)
VERTICAL UNITS/DIV
S350
178 LINEAR IC TEST FIXTURE
REV. B, JAN 1977
1474-56
FUNCTION/VERTICAL SWITCHES 5

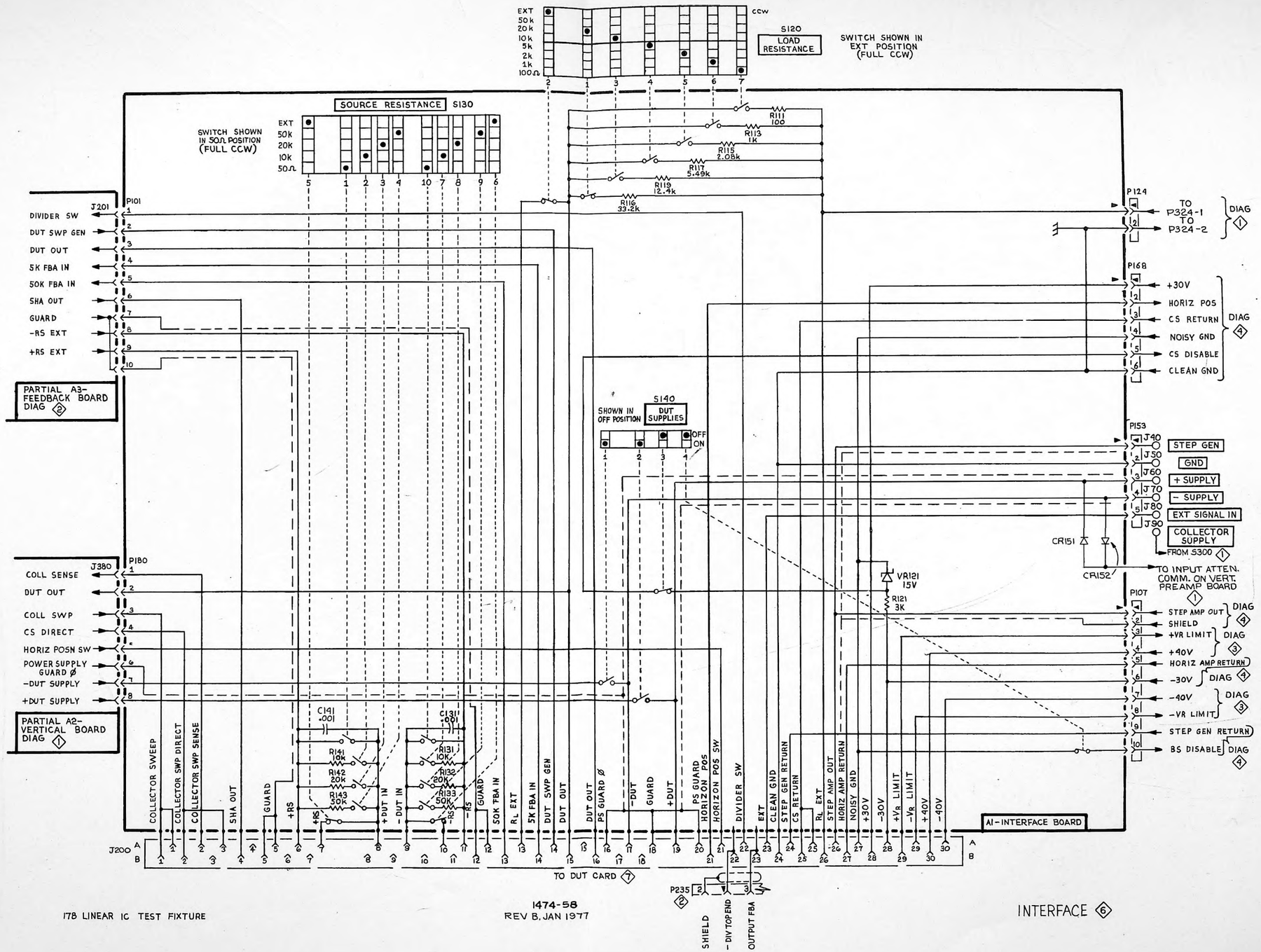

178 LINEAR IC TEST FIXTURE

1474-58
REV B, JAN 1977

INTERFACE 6

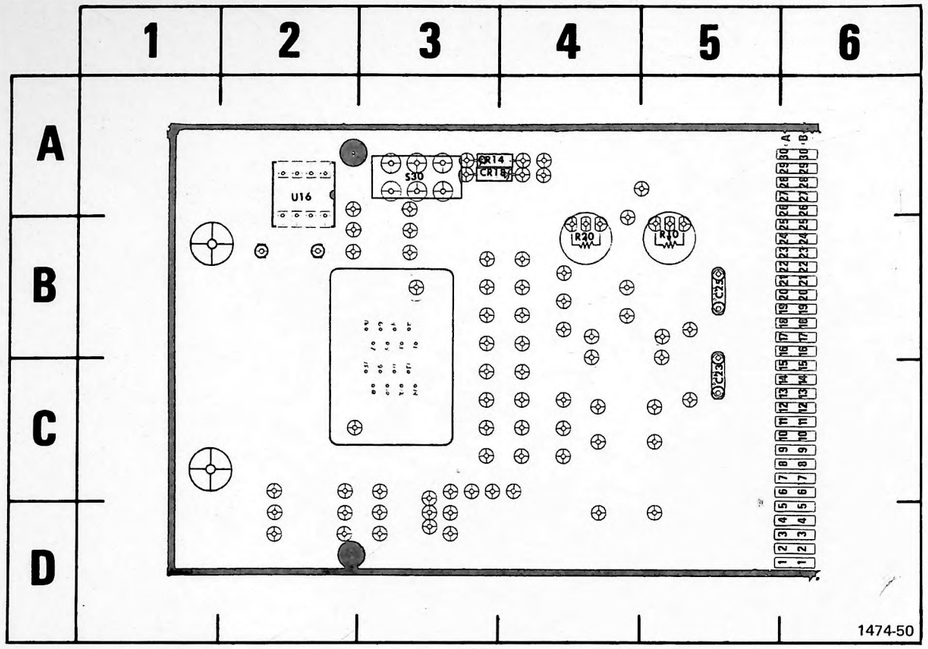

Fig. 7-5. A5—Standard Op Amp Card circuit board.

CKT NO	GRID LOC
C23	5C
C25	5B
CR14	3A
CR18	3A
R10	5B
R20	4B
S30	3A
U16	2A

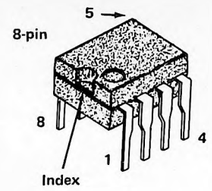

INTEGRATED CIRCUITS

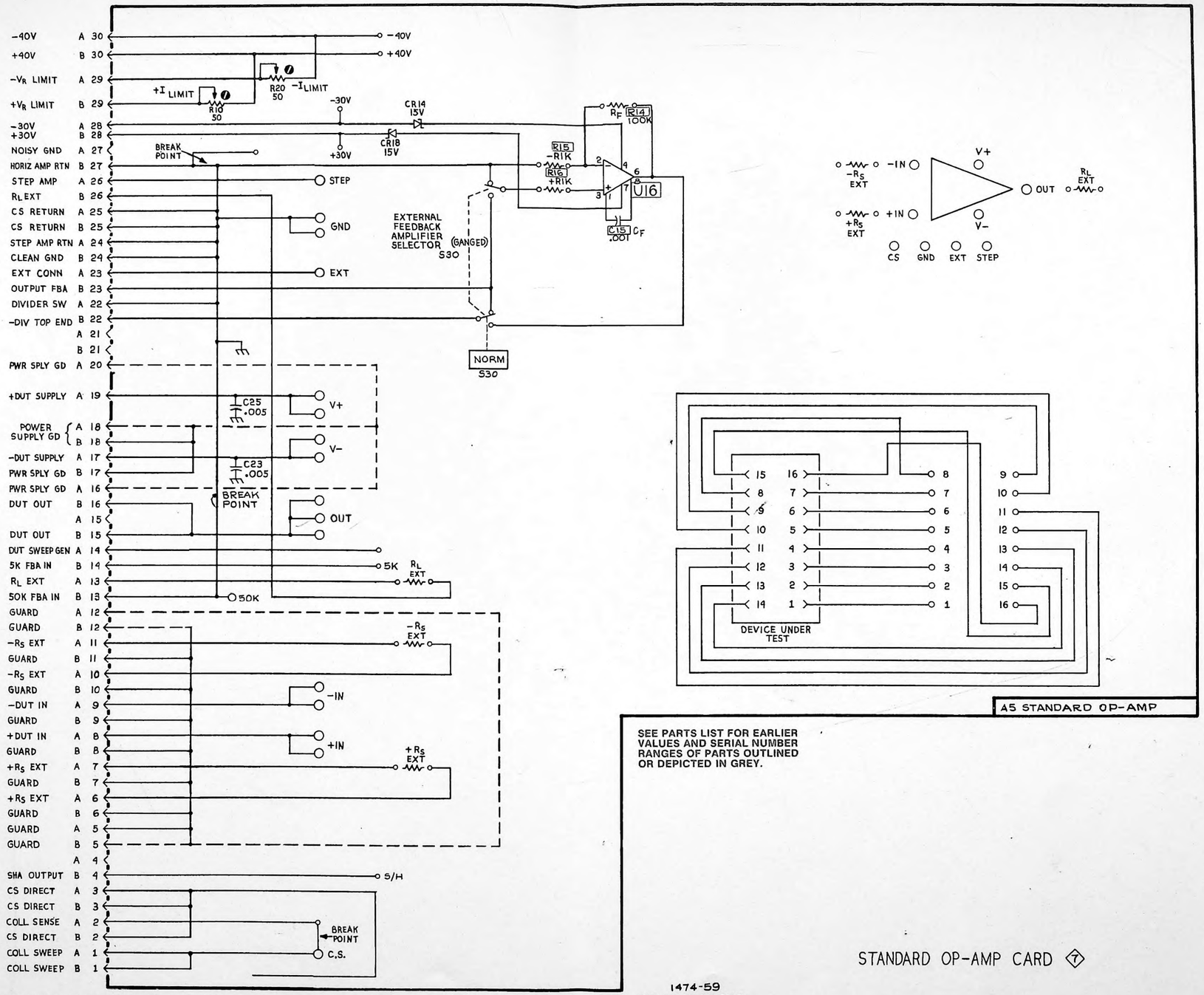

178 LINEAR IC TEST FIXTURE

SEE PARTS LIST FOR EARLIER VALUES AND SERIAL NUMBER RANGES OF PARTS OUTLINED OR DEPICTED IN GREY.

STANDARD OP-AMP CARD ⑦

1474-59
REV B, JAN 1977

Tektr

acco
and
deve
impo
infor
numb

impr
repre
numb

manu

numb

"
#
ACTR
ADPT
ALIGN
AL
ASSE
ASSY
ATTE
AWG
BD
BRKT
BRS
BRZ
BSHG
CAB
CAP
CER
CHAS
CKT
COMP
CONN
COV
CPLG
CRT
DEG
DWR

REV. F

SWITCHING BLOCK DIAGRAM

ASSEMBLY AS

REPLACEABLE MECHANICAL PARTS

PARTS ORDERING INFORMATION

Replacement parts are available from or through your local Tektronix, Inc. Field Office or representative.

Changes to Tektronix instruments are sometimes made to accommodate improved components as they become available, and to give you the benefit of the latest circuit improvements developed in our engineering department. It is therefore important, when ordering parts, to include the following information in your order: Part number, instrument type or number, serial number, and modification number if applicable.

If a part you have ordered has been replaced with a new or improved part, your local Tektronix, Inc. Field Office or representative will contact you concerning any change in part number.

Change information, if any, is located at the rear of this manual.

SPECIAL NOTES AND SYMBOLS

X000	Part first added at this serial number
00X	Part removed after this serial number

FIGURE AND INDEX NUMBERS

Items in this section are referenced by figure and index numbers to the illustrations.

INDENTATION SYSTEM

This mechanical parts list is indented to indicate item relationships. Following is an example of the indentation system used in the description column.

1 2 3 4 5 Name & Description

Assembly and/or Component
Attaching parts for Assembly and/or Component
- - - * - - -
Detail Part of Assembly and/or Component
Attaching parts for Detail Part
- - - * - - -
Parts of Detail Part
Attaching parts for Parts of Detail Part
- - - * - - -

Attaching Parts always appear in the same indentation as the item it mounts, while the detail parts are indented to the right. Indented items are part of, and included with, the next higher indentation. The separation symbol - - - * - - - indicates the end of attaching parts.

Attaching parts must be purchased separately, unless otherwise specified.

ITEM NAME

In the Parts List, an Item Name is separated from the description by a colon (:). Because of space limitations, an Item Name may sometimes appear as incomplete. For further Item Name identification, the U.S. Federal Cataloging Handbook H6-1 can be utilized where possible.

ABBREVIATIONS

INCH	
NUMBER SIZE	
ACTUATOR	
ADAPTER	
ALIGNMENT	
ALUMINUM	
ASSEMBLED	
ASSEMBLY	
ATTENUATOR	
AMERICAN WIRE GAGE	
BOARD	
BRACKET	
BRASS	
BRONZE	
BUSHING	
CABINET	
CAPACITOR	
CERAMIC	
CHASSIS	
CIRCUIT	
COMPOSITION	
CONNECTOR	
COVER	
COUPLING	
CATHODE RAY TUBE	
DEGREE	
DRAWER	
ELCTRN	ELECTRON
ELEC	ELECTRICAL
ELCTLT	ELECTROLYTIC
ELEM	ELEMENT
EPL	ELECTRICAL PARTS LIST
EQPT	EQUIPMENT
EXT	EXTERNAL
FIL	FILLISTER HEAD
FLEX	FLEXIBLE
FLH	FLAT HEAD
FLTR	FILTER
FR	FRAME or FRONT
FSTNR	FASTENER
FT	FOOT
FXD	FIXED
GSKT	GASKET
HDL	HANDLE
HEX	HEXAGON
HEX HD	HEXAGONAL HEAD
HEX SOC	HEXAGONAL SOCKET
HLCPS	HELICAL COMPRESSION
HLEXT	HELICAL EXTENSION
HV	HIGH VOLTAGE
IC	INTEGRATED CIRCUIT
ID	INSIDE DIAMETER
IDENT	IDENTIFICATION
IMPLR	IMPELLER
IN	INCH
INCAND	INCANDESCENT
INSUL	INSULATOR
INTL	INTERNAL
LPHLDR	LAMPHOLDER
MACH	MACHINE
MECH	MECHANICAL
MTG	MOUNTING
NIP	NIPPLE
NON WIRE	NOT WIRE WOUND
OBD	ORDER BY DESCRIPTION
OD	OUTSIDE DIAMETER
OVH	OVAL HEAD
PH BRZ	PHOSPHOR BRONZE
PL	PLAIN or PLATE
PLSTC	PLASTIC
PN	PART NUMBER
PNH	PAN HEAD
PWR	POWER
RCPT	RECEPTACLE
RES	RESISTOR
RGD	RIGID
RLF	RELIEF
RTNR	RETAINER
SCH	SOCKET HEAD
SCOPE	OSCILLOSCOPE
SCR	SCREW
SE	SINGLE END
SECT	SECTION
SEMICOND	SEMICONDUCTOR
SHLD	SHIELD
SHLDR	SHOULDERED
SKT	SOCKET
SL	SLIDE
SLFLKG	SELF-LOCKING
SLVG	SLEEVING
SPR	SPRING
SQ	SQUARE
SST	STAINLESS STEEL
STL	STEEL
SW	SWITCH
T	TUBE
TERM	TERMINAL
THD	THREAD
THK	THICK
TNSN	TENSION
TPG	TAPPING
TRH	TRUSS HEAD
V	VOLTAGE
VAR	VARIABLE
W/	WITH
WSHR	WASHER
XFMR	TRANSFORMER
XSTR	TRANSISTOR

CROSS INDEX MFR. CODE NUMBER TO MANUFACTURER

MFR.CODE	MANUFACTURER	ADDRESS	CITY,STATE,ZIP
00779	AMP, INC.	P. O. BOX 3608	HARRISBURG, PA 17105
05129	KILO ENGINEERING CO.	2015 D	LA VERNE, CA 91750
05574	VIKING INDUSTRIES, INC.	9324 TOPANGA CANYON BLVD.	CHATSWORTH, CA 91311
08261	SPECTRA-STRIP CORP.	7100 LAMPSON AVE.	GARDEN GROVE, CA 92642
09422	PLASTIC STAMPING CORP.	2216 W. ARMITAGE AVE.	CHICAGO, IL 60647
12327	FREEWAY CORP.	9301 ALLEN DR.	CLEVELAND, OH 44125
12360	ALBANY PRODUCTS CO., DIV. OF PNEUMO DYNAMICS CORP.	351 CONNECTICUT AVE.	SOUTH NORWALK, CT 06856
22526	BERG ELECTRONICS, INC.	YOUK EXPRESSWAY	NEW CUMBERLAND, PA 17070
23499	GAVITT WIRE AND CABLE, DIVISION OF RSC INDUSTRIES, INC.	455 N. QUINCE ST.	ESCONDIDO, CA 92025
70485	ATLANTIC INDIA RUBBER WORKS, INC.	571 W. POLK ST.	CHICAGO, IL 60607
71159	BRISTOL SOCKET SCREW, DIV. OF AMERICAN CHAIN AND CABLE CO., INC.	40 BRISTOL ST.	WATERBURY, CT 06720
71590	CENTRALAB ELECTRONICS, DIV. OF GLOBE-UNION, INC.	5757 N. GREEN BAY AVE.	MILWAUKEE, WI 53201
71785	TRW ELECTRONIC COMPONENTS, CINCH CONNECTOR OPERATIONS	1501 MORSE AVE.	ELK GROVE VILLAGE, IL 60007
73743	FISCHER SPECIAL MFG. CO.	446 MORGAN ST.	CINCINNATI, OH 45206
74445	HOLO-KROME CO.	31 BROOK ST. WEST	HARTFORD, CT 06110
76854	OAK INDUSTRIES, INC., SWITCH DIV.	S. MAIN ST.	CRYSTAL LAKE, IL 60014
78189	ILLINOIS TOOL WORKS, INC. SHAKEPROOF DIVISION	ST. CHARLES ROAD	ELGIN, IL 60120
78471	TILLEY MFG. CO.	900 INDUSTRIAL RD.	SAN CARLOS, CA 94070
79136	WALDES, KOHINOOR, INC.	47-16 AUSTEL PLACE	LONG ISLAND CITY, NY 11101
79807	WROUGHT WASHER MFG. CO.	2100 S. O BAY ST.	MILWAUKEE, WI 53207
80009	TEKTRONIX, INC.	P. O. BOX 500	BEAVERTON, OR 97077
81073	GRAYHILL, INC.	561 HILLGROVE AVE.	LA GRANGE, IL 60525
82647	TEXAS INSTRUMENTS, INC., CONTROL PRODUCTS DIV.	34 FOREST ST.	ATTLEBORO, MA 02703
83385	CENTRAL SCREW CO.	2530 CRESCENT DR.	BROADVIEW, IL 60153
83501	GAVITT WIRE AND CABLE, DIVISION OF RSC INDUSTRIES, INC.	CENTRAL ST.	BROOKFIELD, MA 01506
97464	INDUSTRIAL RETAINING RING CO.	57 CORDIER ST.	IRVINGTON, NJ 07111

Tektronix Part No.	Serial/Model No. Eff	Dscont	Qty	1 2 3 4 5 Name & Description	Mfr Code	Mfr Part Number
390-0359-00			1	CABINET,BOTTOM:PLUG-IN UNIT	80009	390-0359-00
				(ATTACHING PARTS)		
211-0504-00			3	SCREW,MACHINE:6-32 X 0.25 INCH,PNH STL	83385	OBD
211-0101-00			2	SCREW,MACHINE:4-40 X 0.25" 100 DEG,FLH STL	83385	OBD
211-0105-00			2	SCREW,MACHINE:4-40 X 0.188"100 DEG,FLH STL	83385	OBD
210-0586-00			2	NUT,PLAIN,EXT W:4-40 X 0.25 INCH,STL	78189	OBD
				- - - * - - -		
390-0227-00			1	CABINET,SIDE:RIGHT	80009	390-0227-00
				(ATTACHING PARTS)		
213-0146-00			4	SCR,TPG,THD FOR:6-20 X 0.313 INCH,PNH STL	83385	OBD
211-0504-00			2	SCREW,MACHINE:6-32 X 0.25 INCH,PNH STL	83385	OBD
				- - - * - - -		
390-0228-01			1	CABINET,SIDE:LEFT	80009	390-0228-01
				(ATTACHING PARTS)		
213-0146-00			4	SCR,TPG,THD FOR:6-20 X 0.313 INCH,PNH STL	83385	OBD
211-0504-00			2	SCREW,MACHINE:6-32 X 0.25 INCH,PNH STL	83385	OBD
				- - - * - - -		
337-1963-00			1	SHLD,ELECTRICAL:CIRCUIT BOARD	80009	337-1963-00
				(ATTACHING PARTS)		
211-0007-00			1	SCREW,MACHINE:4-40 X 0.188 INCH,PNH STL	83385	OBD
				- - - * - - -		
337-1962-00			1	SHLD,ELECTRICAL:CIRCUIT BOARD	80009	337-1962-00
				(ATTACHING PARTS)		
211-0007-00			1	SCREW,MACHINE:4-40 X 0.188 INCH,PNH STL	83385	OBD
				- - - * - - -		
337-1961-00			1	SHIELD,JACK:	80009	337-1961-00
260-0247-00			1	SWITCH,PUSH:SPST,NORMALLY OPEN(S441)	81073	30YY1009
				(ATTACHING PARTS)		
210-0583-00			1	NUT,PLAIN,HEX.:0.25-32 X 0.312 INCH,BRS	73743	2X20319-402
210-0940-00			1	WASHER,FLAT:0.25 ID X 0.375 INCH OD,STL	79807	OBD
210-0046-00			1	WASHER,LOCK:INTL,0.26 ID X 0.40" OD,STL	78189	1214-05-00-0541C
				- - - * - - -		
333-1731-00			1	PANEL,FRONT:178	80009	333-1731-00
366-0125-00			2	KNOB:KNURLED,SECURING	80009	366-0125-00
213-0004-00			2	. SETSCREW:6-32 X 0.188 INCH,HEX.SOC STL	74445	OBD
210-0894-00			2	WASHER,NONMETAL:0.19 ID X 0.438"OD,PLSTC	09422	OBD
384-0900-00			2	ROD,SECURING:0.188 DIA X 8.25 INCH LONG	80009	384-0900-00
				(ATTACHING PARTS FOR EACH)		
354-0025-00			1	RING,RETAINING:0.181 INCH FREE ID	79136	5555-18
				- - - * - - -		
136-0140-00			6	JACK,TIP:BANANA STYLE,CHARCOAL GRAY CAP	80009	136-0140-00
				(ATTACHING PARTS FOR EACH)		
210-0583-00			1	NUT,PLAIN,HEX.:0.25-32 X 0.312 INCH,BRS	73743	2X20319-402
210-0223-00			1	TERMINAL,LUG:0.25 INCH DIA,SE	78189	2101-14-03-2520N
210-0465-00			1	NUT,PLAIN,HEX.:0.25-32 X 0.375 INCH BRS	73743	3095-402
210-0895-00			1	WSHR,SHOULDERED:0.375 OD X 0.105" THK NYLON	80009	210-0895-00
				- - - * - - -		
426-1024-00			1	FRAME PNL,CAB:FRONT	80009	426-1024-00
				(ATTACHING PARTS)		
211-0541-00			2	SCREW,MACHINE:6-32 X 0.25"100 DEG,FLH STL	83385	OBD
				- - - * - - -		
366-1023-02			1	KNOB:GRAY--VAR	80009	366-1023-02
213-0246-00			1	. SETSCREW:5-40 X 0.093 INCH L,HEX SOC	71159	OBD
366-1037-00			1	KNOB:GRAY	80009	366-1037-00
213-0153-00			2	. SETSCREW:5-40 X 0.125 INCH,HEX SOC STL	74445	OBD
366-1207-00			2	KNOB:GRAY	80009	366-1207-00
----- -----			-	. EACH KNOB INCLUDES:		
213-0153-00			1	. SETSCREW:5-40 X 0.125 INCH,HEX SOC STL	74445	OBD
331-0373-00			1	DIAL,CONTROL:	05129	771-S-6
366-1190-00			2	KNOB:GRAY	80009	366-1190-00
----- -----			-	. EACH KNOB INCLUDES:		
213-0153-00			2	. SETSCREW:5-40 X 0.125 INCH,HEX SOC STL	74445	OBD
366-1508-00			1	KNOB:GRAY,WITH SKIRT	80009	366-1508-00

Fig. & Index No.	Tektronix Part No.	Serial/Model No. Eff	Dscont	Qty	1 2 3 4 5 Name & Description	Mfr Code	Mfr Part Number
1-	213-0153-00			2	. SETSCREW:5-40 X 0.125 INCH,HEX SOC STL	74445	OBD
-39	333-1770-00			1	PANEL,FUNCT SW:178	80009	333-1770-00
-40	352-0251-00			1	HOLDER,SCALE:2.14 INCH SQ,PLASTIC	80009	352-0251-00
-41	366-1501-00			1	KNOB:GRAY,WITH SKIRT	80009	366-1501-00
	213-0153-00			2	. SETSCREW:5-40 X 0.125 INCH,HEX SOC STL	74445	OBD
-42	----- -----			1	RES.,VARIABLE:(SEE R415 EPL)		
					(ATTACHING PARTS)		
-43	210-0590-00			2	NUT,PLAIN,HEX.:0.375 X 0.438 INCH,STL	73743	2X28269-402
-44	210-0012-00			1	WASHER,LOCK:INTL,0.375 ID X 0.50" OD STL	78189	1220-02-00-0541C
					- - - * - - -		
-45	384-1210-00			1	EXTENSION,SHAFT:0.125 OD X 1.875 INCH LONG	80009	384-1210-00
					(ATTACHING PARTS)		
-46	376-0014-00			1	CPLG,SHAFT,FLEX:SST WIRE	76854	22675-001
					- - - * - - -		
-47	260-1529-00			1	SWITCH,ROTARY:SWEEP FREQUENCY(S420)	76854	5-18252-142
					(ATTACHING PARTS)		
-48	210-0590-00			1	NUT,PLAIN,HEX.:0.375 X 0.438 INCH,STL	73743	2X28269-402
-49	210-0978-00			1	WASHER,FLAT:0.375 ID X 0.50 INCH OD,STL	78471	OBD
					- - - * - - -		
-50	----- -----			1	RES.,VARIABLE:(SEE R460/S460 EPL)		
-51	----- -----			1	RES.,VARIABLE:(SEE R565/S565 EPL)		
					(ATTACHING PARTS FOR EACH)		
-52	210-0583-00			1	NUT,PLAIN,HEX.:0.25-32 X 0.312 INCH,BRS	73743	2X20319-402
-53	210-0940-00			1	WASHER,FLAT:0.25 ID X 0.375 INCH OD,STL	79807	OBD
					- - - * - - -		
-54	----- -----			1	RES.,VARIABLE:(SEE R560 EPL)		
					(ATTACHING PARTS)		
-55	210-0046-00			1	WASHER,LOCK:INTL,0.26 ID X 0.40" OD,STL	78189	1214-05-00-0541C
					- - - * - - -		
-56	----- -----			1	LAMP:(SEE DS441 EPL)		
					(ATTACHING PARTS)		
-57	348-0004-00			1	GROMMET,RUBBER:0.281 ID X 0.563 INCH OD	70485	763
					- - - * - - -		
-58	366-1489-37			1	PUSHBUTTON:GRAY PLASTIC	80009	366-1489-37
-59	426-0681-00			1	FR,PUSH BUTTON:GRAY PLASTIC	80009	426-0681-00
-60	358-0029-05			2	BSHG,MACH THD:0.274 ID X 0.438"L,NP BRS	80009	358-0029-05
					(ATTACHING PARTS FOR EACH)		
-61	210-0590-00			1	NUT,PLAIN,HEX.:0.375 X 0.438 INCH,STL	73743	2X28269-402
-62	210-0012-00			1	WASHER,LOCK:INTL,0.375 ID X 0.50" OD,STL	78189	1220-02-00-0541C
-63	210-0978-00			1	WASHER,FLAT:0.375 ID X 0.50 INCH OD,STL	78471	OBD
					- - - * - - -		
-64	390-0358-00			1	CABINET,TOP:	80009	390-0358-00
-65	351-0380-00			2	GUIDE,CKT BD:PLASTIC	80009	351-0380-00
					(ATTACHING PARTS FOR EACH)		
-66	211-0038-00			2	SCREW,MACHINE:4-40 X 0.312"100 DEG,FLH STL	83385	OBD
					- - - * - - -		
-67	407-1296-00			1	BRACKET,ANGLE:	80009	407-1296-00
					(ATTACHING PARTS)		
-68	211-0030-00			2	SCREW,MACHINE:2-56 X 0.25"82 DEG,FLH STL	83385	OBD
-69	210-0001-00			2	WASHER,LOCK:INTL,0.092 ID X 0.18"OD,STL	78189	1202-00-00-0541C
-70	210-0405-00			2	NUT,PLAIN,HEX.:2-56 X 0.188 INCH,BRS	73743	2X12157-402
					- - - * - - -		
-71	386-2569-00			1	DIFFUSER,LIGHT:SWITCH ILLUM	80009	386-2569-00
-72	352-0157-00			1	LAMPHOLDER:WHITE PLASTIC	80009	352-0157-00
-73	200-0935-00			1	BASE,LAMPHOLDER:0.29 OD X 0.19 CASE	80009	200-0935-00
-74	386-2658-00			1	PLATE,TRIM:REAR	80009	386-2658-00
					(ATTACHING PARTS)		
-75	211-0504-00			3	SCREW,MACHINE:6-32 X 0.25 INCH,PNH STL	83385	OBD
					- - - * - - -		
-76	352-0157-00			4	LAMPHOLDER:WHITE PLASTIC	80009	352-0157-00
-77	200-0935-00			4	BASE,LAMPHOLDER:0.29 OD X 0.19 CASE	80009	200-0935-00

Fig. & Index No.	Tektronix Part No.	Serial/Model No. Eff	Dscont	Qty	1 2 3 4 5	Name & Description	Mfr Code	Mfr Part Number
1-78	378-0635-00			4		LENS,LIGHT:WHITE	80009	378-0635-00
-79	131-0942-00			1		CONTACT,ELEC:GROUNDING	80009	131-0942-00
						(ATTACHING PARTS)		
-80	213-0138-00			1		SCR,TPG,THD FOR:4-40 X 0.188 INCH,PNH STL	83385	OBD
						- - - * - - -		
-81	384-1202-00			1		EXTENSION SHAFT:LEVER SWITCH	80009	384-1202-00
-82	214-1770-00			1		LEVER,SLIDE SW:	80009	214-1770-00
						(ATTACHING PARTS)		
-83	354-0165-00			1		RING,RETAINING:0.114 FREE IDX 0.025 INCH	97464	1000-15
						- - - * - - -		
-84	407-1297-00			1		BRACKET,ANGLE:SWITCH	80009	407-1297-00
						(ATTACHING PARTS)		
-85	211-0101-00			2		SCREW,MACHINE:4-40 X 0.25" 100 DEG,FLH STL	83385	OBD
						- - - * - - -		
-86	441-1149-00			1		CHAS,ELEC EQPT:MAIN	80009	441-1149-00
-87	426-1023-00	B010100	B039999	1		FRAME PNL,CAB.:REAR	80009	426-1023-00
	426-1023-01	B040000		1		FRAME SECT,CAB.:REAR	80009	426-1023-01
						(ATTACHING PARTS)		
-88	211-0101-00			4		SCREW,MACHINE:4-40 X 0.25" 100 DEG,FLH STL	83385	OBD
						- - - * - - -		
-89	166-0353-00	B010100	B030929	1		SLEEVE,LOCKING:0.32 DIA X 0.57 INCH LONG	80009	166-0353-00
	166-0345-00	B030930		1		SLEEVE,LOCKING:0.32 DIA X 0.457 INCH L,NYLON	80009	166-0345-00
-90	----- -----			2		TRANSISTOR:(SEE Q484,Q584 EPL)		
						(ATTACHING PARTS FOR EACH)		
-91	211-0510-00			1		SCREW,MACHINE:6-32 X 0.375 INCH,PNH STL	83385	OBD
-92	210-0071-00			1		WASHER,SPR TNSN:0.146 ID X 0.323" OD,STL	78189	4706-05-01-0531
-93	210-0407-00			1		NUT,PLAIN,HEX.:6-32 X 0.25 INCH,BRS	73743	3038-0228-402
						- - - * - - -		
-94	342-0163-00			2		INSULATOR,PLATE:XSTR,0.675 X 0.625 X 0.001"	80009	342-0163-00
-95	407-1298-00			2		BRACKET,ANGLE:CIRCUIT BOARD MTG	80009	407-1298-00
						(ATTACHING PARTS FOR EACH)		
-96	211-0116-00			2		SCR,ASSEM WSHR:4-40 X 0.312 INCH,PNH BRS	83385	OBD
						- - - * - - -		
-97	----- -----			1		CKT BOARD ASSY:POWER SUPPLY(SEE A4 EPL)		
-98	131-0589-00			6		. CONTACT,ELEC:0.46 INCH LONG	22526	47350
	131-0608-00			54		. CONTACT,ELEC:0.365 INCH LONG	22526	47357
-99	136-0252-04			3		. SOCKET,PIN TERM:0.188 INCH LONG	22526	75060
-100	136-0183-00	B010100	B030909X	1		. SOCKET,PLUG-IN:3 PIN,ROUND	80009	136-0183-00
-101	136-0220-00	B010100	B030909X	11		. SOCKET,PLUG-IN:3 PIN,SQUARE	71785	133-23-11-034
	136-0252-04	XB030910		36		. SOCKET,PIN TERM:0.188 INCH LONG(NOT SHOWN)	22526	75060
-102	136-0237-00			2		. SOCKET,PLUG-IN:8 CONTACT,ROUND	71785	133-98-12-062
-103	136-0514-00			3		. SOCKET,PLUG IN:MICROCIRCUIT,8 CONTACT	73803	C9308-02
	136-0403-00	XB040000		4		. SOCKET,PLUG-IN ELEK:MICRKT TEST(NOT SHOWN)	80009	136-0403-00
-104	214-0579-00			3		. TERM.,TEST PT:0.40 INCH LONG	80009	214-0579-00
-105	214-0720-01			1		SPRING,GROUND:	80009	214-0720-01
						(ATTACHING PARTS)		
-106	210-0586-00			1		NUT,PLAIN,EXT W:4-40 X 0.25 INCH,STL	78189	OBD
						- - - * - - -		
	672-0070-00			1		CKT BOARD ASSY:CAM SWITCH	80009	672-0070-00
						(ATTACHING PARTS)		
-107	211-0116-00			2		SCR,ASSEM WSHR:4-40 X 0.312 INCH,PNH BRS	83385	OBD
-108	211-0154-00			2		SCR,ASSEM WSHR:4-40 X 0.562 INCH,PNH BRS	83385	OBD
						- - - * - - -		
	----- -----			-		. CKT BOARD ASSY CAM SWITCH INCLUDES:		
	263-1026-00			1		. DRUM ASSY,CAM S:SOURCE RESISTANCE	80009	263-1026-00
						(ATTACHING PARTS)		
-109	211-0116-00			4		. SCR,ASSEM WSHR:4-40 X 0.312 INCH,PNH BRS	83385	OBD
						- - - * - - -		
	----- -----			-		. . ACTUATOR ASSY INCLUDES:		
-110	200-0995-00			1		. . COVER,CAM SW:	80009	200-0995-00
						(ATTACHING PARTS)		
-111	211-0022-00			2		. . SCREW,MACHINE:2-56 X 0.188 INCH,PNH STL	83385	OBD
-112	210-0001-00			2		. . WASHER,LOCK:INTL,0.092 ID X 0.18"OD,STL	78189	1202-00-00-0541C
						- - - * - - -		
-113	210-0405-00			1		. . NUT,PLAIN,HEX.:2-56 X 0.188 INCH,BRS	73743	2X12157-402
-114	210-0406-00			2		. . NUT,PLAIN,HEX.:4-40 X 0.188 INCH,BRS	73743	2X12161-402
-115	214-1126-00			1		. . SPRING,FLAT:GOLD COLORED	80009	214-1126-00

Fig. & Index No.	Tektronix Part No.	Serial/Model No. Eff	Dscont	Qty	1 2 3 4 5 Name & Description	Mfr Code	Mfr Part Number
1-	214-1126-02			1	. . SPRING,FLAT:RED COLORED	80009	214-1126-02
-116	214-1127-00			1	. . ROLLER,DETENT:0.125 DIA X 0.125 INCH L	80009	214-1127-00
-117	401-0058-00			1	. . BEARING,CAM SW:FRONT	80009	401-0058-00
					(ATTACHING PARTS)		
-118	354-0219-00			1	. . RING,RETAINING:FOR 0.25 INCH SHAFT	79136	5103-25-MD-R
					- - - * - - -		
-119	105-0460-00			1	. . ACTUATOR,CAM SW:	80009	105-0460-00
-120	210-0405-00			1	. . NUT,PLAIN,HEX.:2-56 X 0.188 INCH,BRS	73743	2X12157-402
-121	210-0406-00			2	. . NUT,PLAIN,HEX.:4-40 X 0.188 INCH,BRS	73743	2X12161-402
-122	401-0061-00			1	. . BEARING,CAM SW:REAR	80009	401-0061-00
	263-1027-00			1	. ACTR ASSY,CAM S:LOAD RESISTANCE(S120)	80009	263-1027-00
					(ATTACHING PARTS)		
-123	211-0116-00			4	. SCR,ASSEM WSHR:4-40 X 0.312 INCH,PNH BRS	83385	OBD
					- - - * - - -		
	----- -----			-	. . ACTUATOR ASSY INCLUDES:		
-124	200-1033-00			1	. . COVER,CAM SW:	80009	200-1033-00
					(ATTACHING PARTS)		
-125	211-0022-00			2	. . SCREW,MACHINE:2-56 X 0.188 INCH,PNH STL	83385	OBD
-126	210-0001-00			2	. . WASHER,LOCK:INTL,0.092 ID X 0.18"OD,STL	78189	1202-00-00-0541C
					- - - * - - -		
-127	210-0405-00			1	. . NUT,PLAIN,HEX.:2-56 X 0.188 INCH,BRS	73743	2X12157-402
-128	210-0406-00			2	. . NUT,PLAIN,HEX.:4-40 X 0.188 INCH,BRS	73743	2X12161-402
-129	214-1126-00			1	. . SPRING,FLAT:GOLD COLORED	80009	214-1126-00
	214-1126-02			1	. . SPRING,FLAT:RED COLORED	80009	214-1126-02
-130	214-1127-00			1	. . ROLLER,DETENT:0.125 DIA X 0.125 INCH L	80009	214-1127-00
-131	401-0058-00			1	. . BEARING,CAM SW:FRONT	80009	401-0058-00
					(ATTACHING PARTS)		
-132	354-0219-00			1	. . RING,RETAINING:FOR 0.25 INCH SHAFT	79136	5103-25-MD-R
					- - - * - - -		
-133	105-0459-00			1	. . DRUM,CAM SWITCH:	80009	105-0459-00
-134	210-0405-00			1	. . NUT,PLAIN,HEX.:2-56 X 0.188 INCH,BRS	73743	2X12157-402
-135	210-0406-00			2	. . NUT,PLAIN,HEX.:4-40 X 0.188 INCH,BRS	73743	2X12161-402
-136	401-0061-00			1	. . BEARING,CAM SW:REAR	80009	401-0061-00
	105-0467-00			1	. ACTUATOR,SWITCH:SLIDE ASSY,ON-OFF(S140)	80009	105-0467-00
-137	376-0142-00			1	. . ADPT,SHAFT,CPLG:SLIDE TO SHAFT	80009	376-0142-00
					(ATTACHING PARTS)		
-138	213-0048-00			1	. . SETSCREW:4-40 X 0.125 INCH,HEX SOC STL	74445	OBD
					- - - * - - -		
-139	214-1126-01			2	. . SPRING,FLAT:GREEN COLORED	80009	214-1126-01
-140	214-1127-00			2	. . ROLLER,DETENT:0.125 DIA X 0.125 INCH L	80009	214-1127-00
-141	105-0478-00			1	. . ACTUATOR,SWITCH:	80009	105-0478-00
-142	351-0355-00			1	. . GUIDE,SW SLIDE:	80009	351-0355-00
-143	----- -----			-	. CKT BOARD ASSY:INTERFACE(SEE A1 EPL)		
-144	131-0604-00			21	. . CONTACT,ELEC:0.025 SQ X 0.365 INCH LONG	80009	131-0604-00
-145	131-0608-00			23	. . CONTACT,ELEC:0.365 INCH LONG	22526	47357
	131-0787-00			8	. . CONTACT,ELEC:0.64 INCH LONG	22526	47359
-146	131-1228-00			1	. . CONNECTOR,RCPT,:60 PIN	05574	3VH30/1JV5 079
-147	214-1458-00			1	. . KEY,CONNECTOR:	05574	091-0071-00
-148	131-1261-00			10	. . CONTACT,ELEC:F-SHAPED	00779	1-380953-0
-149	175-0072-00			FT	. CABLE,RF:9 INCHES	80009	175-0072-00
-150	131-0707-00			3	. CONTACT,ELEC:0.48"L,22-26 AWG WIRE	22526	47439
-151	352-0161-05			1	. HOLDER,TERM.CON:3 WIRE GREEN	80009	352-0161-05
-152	386-2570-00			1	SUPPORT,CKT BD:INTERFACE	80009	386-2570-00
					(ATTACHING PARTS)		
-153	210-0586-00			2	NUT,PLAIN,EXT W:4-40 X 0.25 INCH,STL	78189	OBD
					- - - * - - -		
-154	----- -----			1	CKT BOARD ASSY:FEEDBACK AMP(SEE A3 EPL)		
					(ATTACHING PARTS)		
-155	211-0116-00			6	SCR,ASSEM WSHR:4-40 X 0.312 INCH,PNH BRS	83385	OBD
-156	211-0168-00			2	SCREW,MACHINE:4-40 X 0.25 INCH,PNH STL	12360	OBD
-157	210-1002-00			2	WASHER,FLAT:0.125 ID X 0.25 INCH OD,BRS	12327	OBD
					- - - * - - -		

Fig. & Index No.	Tektronix Part No.	Serial/Model No. Eff	Dscont	Qty	1 2 3 4 5	Name & Description	Mfr Code	Mfr Part Number
1-	----- -----			-		. CKT BOARD ASSY INCLUDES:		
-158	131-0593-00			7		. CONTACT,ELEC:1.15 INCH LONG	22526	47354
-159	352-0274-00			1		. HOLDER,TERMINAL:FOR 8 SQUARE PINS	80009	352-0274-00
-160	131-0604-00			24		. CONTACT,ELEC:0.025 SQ X 0.365 INCH LONG	80009	131-0604-00
-161	131-0608-00			19		. CONTACT,ELEC:0.365 INCH LONG	22526	47357
-162	136-0252-04			6		. SOCKET,PIN TERM:0.188 INCH LONG	22526	75060
-163	136-0220-00	B010100	B030909X	9		. SOCKET,PLUG-IN:3 PIN,SQUARE	71785	133-23-11-034
	136-0252-04	XB030910		27		. SOCKET,PIN TERM:0.188 INCH LONG	22526	75060
-164	136-0237-00			1		. SOCKET,PLUG-IN:8 CONTACT,ROUND	71785	133-98-12-062
-165	136-0514-00			1		. SOCKET,PLUG IN:MICROCIRCUIT,8 CONTACT	73803	C9308-02
-166	136-0499-10			1		. CONNECTOR,RCPT,:10 CONTACT	00779	4-380949-0
-167	----- -----			2		. TRANSISTOR:(SEE Q546,Q548 EPL)		
						(ATTACHING PARTS FOR EACH)		
-168	211-0008-00			1		. SCREW,MACHINE:4-40 X 0.25 INCH,PNH STL	83385	OBD
-169	210-0004-00			1		. WASHER,LOCK:INTL,0.12 ID X 0.26"OD,STL	78189	1204-00-00-0541C
-170	210-0406-00			1		. NUT,PLAIN,HEX.:4-40 X 0.188 INCH,BRS	73743	2X12161-402
						- - - * - - -		
-171	344-0154-00			4		. CLIP,ELECTRICAL:FOR 0.25 INCH DIA FUSE	80009	344-0154-00
-172	260-1310-00			1		. SWITCH,PUSH:DISPLAY(S200A,B)	71590	2KAA001000-437
-173	361-0384-00			2		. SPACER,PB SW:0.133 INCH LONG	80009	361-0384-00
	672-0413-00			1		CKT BOARD ASSY:CAM SWITCH		
						(ATTACHING PARTS)		
-174	211-0030-00			4		SCREW,MACHINE:2-56 X 0.25"82 DEG,FLH STL	83385	OBD
						- - - * - - -		
	----- -----			-		. CKT BOARD ASSY INCLUDES:		
	263-1024-00			1		. DRUM ASSY,CAM S:VERTICAL UNITS/DIV	80009	263-1024-00
						(ATTACHING PARTS)		
-175	211-0116-00			4		. SCR,ASSEM WSHR:4-40 X 0.312 INCH,PNH BRS	83385	OBD
						- - - * - - -		
	----- -----			-		. . ACTUATOR ASSY INCLUDES:		
-176	214-1139-02			1		. . SPRING,FLAT:GREEN COLORED	80009	214-1139-02
	214-1139-03			1		. . SPRING,FLAT:RED COLORED	80009	214-1139-03
-177	214-1127-00			2		. . ROLLER,DETENT:0.125 DIA X 0.125 INCH L	80009	214-1127-00
-178	210-0406-00			4		. . NUT,PLAIN,HEX.:4-40 X 0.188 INCH,BRS	73743	2X12161-402
	105-0482-00			1		. . STOP,DETENT:	80009	105-0482-00
-179	354-0391-00			1		. . RING,RETAINING:0.395"FREE ID X 0.025" STL	97464	3100-43-CD
-180	401-0081-01			1		. . BEARING,CAM SW:WITH THREADED INSERTS	80009	401-0081-01
-181	105-0461-00			1		. . ACTUATOR,CAM SW:	80009	105-0461-00
-182	210-0406-00			4		. . NUT,PLAIN,HEX.:4-40 X 0.188 INCH,BRS	73743	2X12161-402
-183	401-0115-00			1		. . BEARING,CAM SW:CENTER	80009	401-0115-00
	263-1025-00			1		. DRUM ASSY,CAM S:FUNCTION	80009	263-1025-00
						(ATTACHING PARTS)		
-184	211-0116-00			4		. SCR,ASSEM WSHR:4-40 X 0.312 INCH,PNH BRS	83385	OBD
						- - - * - - -		
	----- -----			-		. . ACTUATOR ASSY INCLUDES:		
-185	214-1139-03			2		. . SPRING,FLAT:RED COLORED	80009	214-1139-03
-186	214-1127-00			2		. . ROLLER,DETENT:0.125 DIA X 0.125 INCH L	80009	214-1127-00
-187	210-0406-00			4		. . NUT,PLAIN,HEX.:4-40 X 0.188 INCH,BRS	73743	2X12161-402
-188	354-0391-00			1		. . RING,RETAINING:0.395"FREE ID X 0.025" STL	97464	3100-43-CD
-189	401-0081-01			1		. . BEARING,CAM SW:WITH THREADED INSERTS	80009	401-0081-01
-190	105-0462-00			1		. . ACTUATOR,CAM SW:	80009	105-0462-00
-191	263-0519-00			1		. . SW SECTION,RTRY:FUNCTION	76854	4-2542-619
						(ATTACHING PARTS)		
-192	211-0181-00			2		. . SCREW,MACHINE:2-56 X 0.375 INCH,PNH BRS	12360	OBD
-193	210-0053-00			2		. . WASHER,LOCK:INTL,0.092 ID X 0.175"OD,STL	83385	OBD
						- - - * - - -		
-194	386-2877-00			1		. . PLATE,SW MTG:	80009	386-2877-00
						(ATTACHING PARTS)		
-195	211-0022-00			2		. . SCREW,MACHINE:2-56 X 0.188 INCH,PNH STL	83385	OBD
						- - - * - - -		
-196	210-0406-00			4		. . NUT,PLAIN,HEX.:4-40 X 0.188 INCH,BRS	73743	2X12161-402
-197	401-0146-01			1		. . BEARING,CAM SW:CENTER	80009	401-0146-01
-198	----- -----			1		. CKT BOARD ASSY:VERT PREAMP(SEE A2 EPL)		
-199	131-0604-00			30		. . CONTACT,ELEC:0.025 SQ X 0.365 INCH LONG	80009	131-0604-00

Fig. & Index No.	Tektronix Part No.	Serial/Model No. Eff	Dscont	Qty	1 2 3 4 5 Name & Description	Mfr Code	Mfr Part Number
1-200	131-0608-00			10	. . CONTACT,ELEC:0.365 INCH LONG	22526	47357
-201	136-0252-04			10	. . CONTACT,ELEC:0.188 INCH LONG	22526	75060
-202	136-0327-01	B010100	B030699X	7	. . CONTACT,ELEC:0.067 INCH DIA	00779	86281-2
-203	136-0499-08			1	. . CONNECTOR,RCPT,:8 CONTACT	00779	30380949-8
-204	136-0514-00			2	. . SOCKET,PLUG-IN:MICROCIRCUIT,8 CONTACT	82647	C930802
	136-0263-03	B010100	B030699	7	. . CONTACT,ELEC:FOR 0.025 INCH SQUARE PIN	00779	86250-2
	136-0263-04	B030700		7	. . CONTACT,ELEC:FOR 0.025 INCH SQUARE PIN	00779	86250-2
-205	175-0825-00			FT	. WIRE,ELECTRICAL:2 WIRE RIBBON,6.5 INCHES	23499	TEK-175-0825-00
-206	175-0825-00			FT	WIRE,ELECTRICAL:2 WIRE RIBBON,24 INCHES	23499	TEK-175-0825-00
-207	175-0826-00			FT	WIRE,ELECTRICAL:3 WIRE RIBBON,13 INCHES	08261	TEK-175-0826-00
-208	175-0827-00			FT	WIRE,ELECTRICAL:4 WIRE RIBBON,8.75 INCHES	08261	TEK-175-0827-00
-209	175-0828-00			FT	WIRE,ELECTRICAL:5 WIRE RIBBON,8.5 INCHES	23499	TEK-175-0828-00
-210	175-0829-00			FT	WIRE,ELECTRICAL:6 WIRE RIBBON,26 INCHES	83501	TEK-175-0829-00
-211	175-0831-00			FT	WIRE,ELECTRICAL:8 WIRE RIBBON,7.5 INCHES	08261	TEK-175-0831-00
-212	175-0832-00			FT	WIRE,ELECTRICAL:9 WIRE RIBBON,9.5 INCHES	23499	TEK-175-0832-00
-213	175-0833-00			FT	WIRE,ELECTRICAL:10 WIRE RIBBON,6.5 INCHES	23499	TEK-175-0833-00
-214	131-0707-00			109	CONTACT,ELEC:0.48"L,22-26 AWG WIRE	22526	47439
-215	352-0169-02			1	CONN BODY,PL,EL:2 WIRE RED	80009	352-0169-02
	352-0169-04			2	CONN BODY,PL,EL:2 WIRE YELLOW	80009	352-0169-04
	352-0169-05			2	CONN BODY,PL,EL:2 WIRE GREEN	80009	352-0169-05
-216	352-0161-09			1	CONN BODY,PL,EL:3 WIRE WHITE	80009	352-0161-09
-217	352-0162-01			1	CONN BODY,PL,EL:4 WIRE BROWN	80009	352-0162-01
-218	352-0163-03			1	CONN BODY,PL,EL:5 WIRE ORANGE	80009	352-0163-03
-219	352-0164-00			2	CONN BODY,PL,EL:6 WIRE BLACK	80009	352-0164-00
	352-0164-03			1	CONN BODY,PL,EL:6 WIRE ORANGE	80009	352-0164-03
	352-0164-04			2	CONN BODY,PL,EL:6 WIRE YELLOW	80009	352-0164-04
	352-0164-08			2	CONN BODY,PL,EL:6 WIRE GRAY	80009	352-0164-08
-220	352-0166-06			2	CONN BODY,PL,EL:8 WIRE BLUE	80009	352-0166-06
-221	352-0167-02			1	CONN BODY,PL,EL:9 WIRE RED	80009	352-0167-02
-220	352-0168-07			2	CONN BODY,PL,EL:10 WIRE VIOLET	80009	352-0168-07

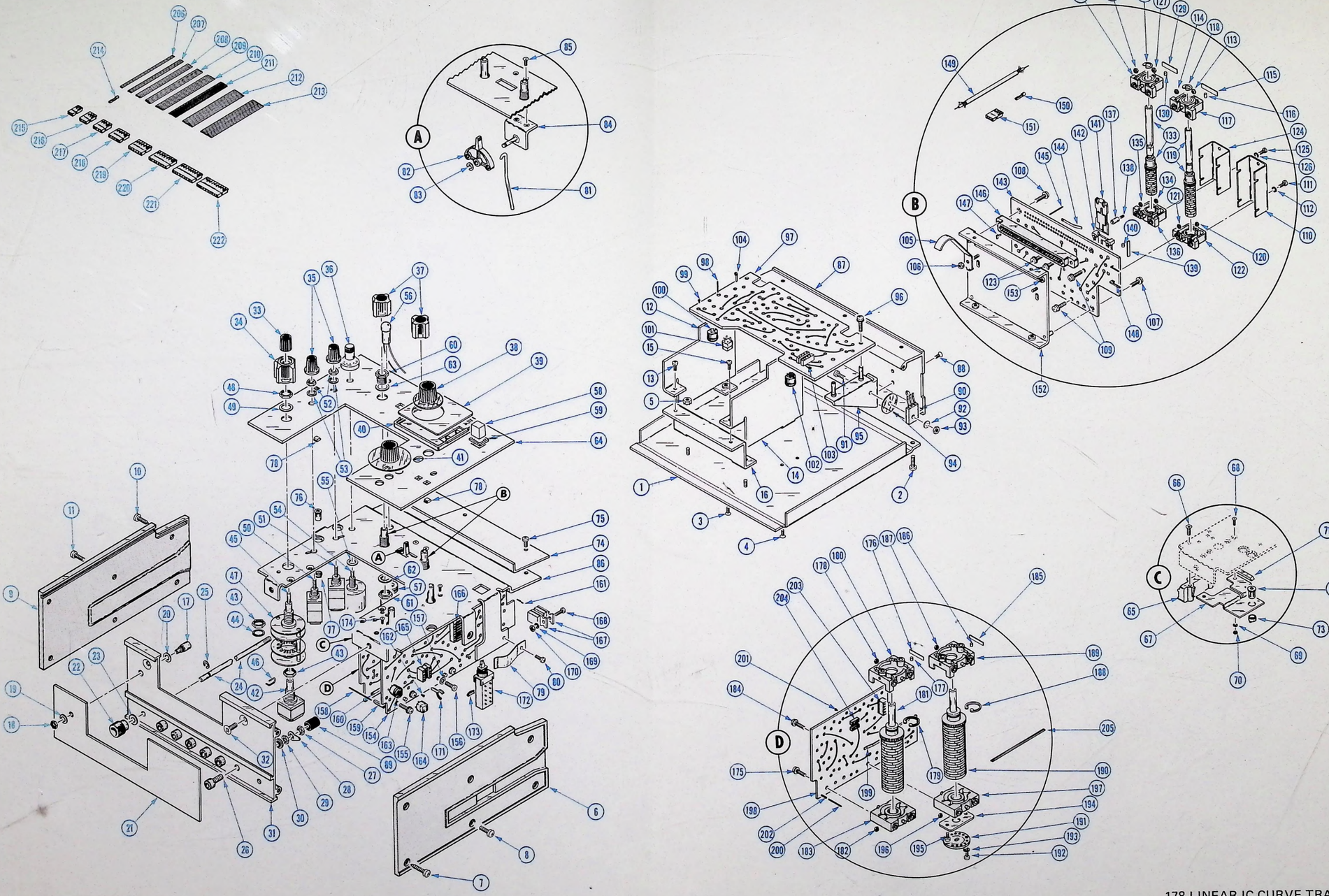

FIG. 1 EXPLODED

ASSEMBLY A5

STANDARD ACCESSORIES

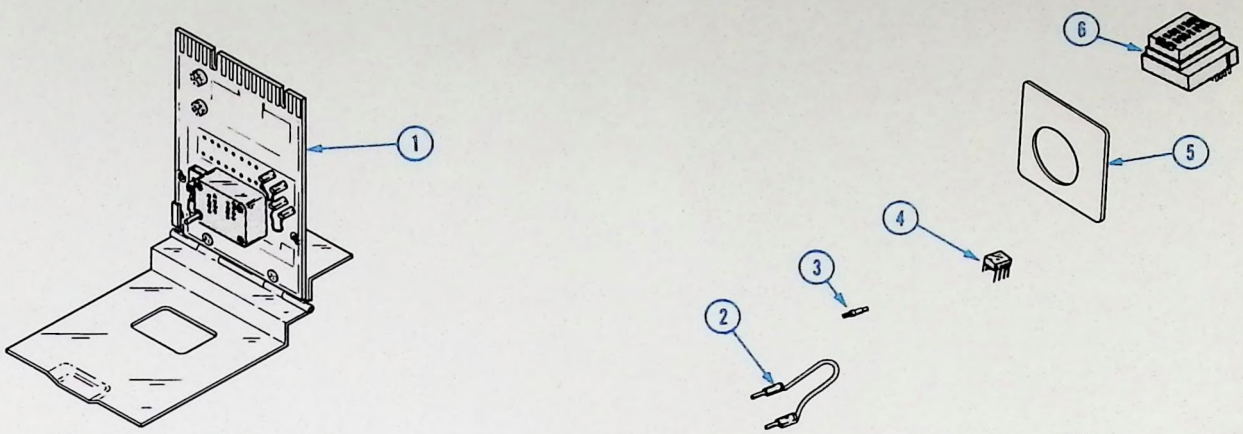

Fig. & Index No.	Tektronix Part No.	Serial/Model No. Eff	Dscont	Qty	1 2 3 4 5	Name & Description	Mfr Code	Mfr Part Number
-1	013-0149-00	B010100	B030709	1		CKT CARD ASSY:STANDARD OP AMP	80009	013-0149-00
	013-0149-01	B030710		1		CKT CARD ASSY:STANDARD OP AMP	80009	013-0149-01
	----- -----			-		. CKT CARD ASSY INCLUDES:		
-2	012-0200-00			10		. PATCH CARD:2 INCHES LONG	71279	3705-1-0312
-3	131-1497-00	B010100	B030709	12		. CONTACT,ELEC:0.04 DIA PIN 1 END	88245	15409
	131-1497-00	B030710		14		. CONTACT,ELEC:0.04 DIA PIN 1 END	88245	15409
	136-0388-00	XB030710		1		. SOCKET,PIN TERM:FOR 0.04 PIN	71279	450-3704-01-03-0
-4	156-0067-00			1		. MICROCIRCUIT,LI:OPERATIONAL AMPLIFIER	80009	156-0067-00
-5	333-1770-00			1		PANEL,FUNCT SW:	80009	333-1770-00
-6	136-0442-00			1		SOCKET,PLUG-IN:MICROCIRCUIT,16 CONTACT	29587	029-385-03
	070-1474-00			1		MANUAL,TECH:INSTRUCTION(NOT SHOWN)	80009	070-1474-00
	070-1977-00			1		MANUAL,TECH:OPERATORS(NOT SHOWN)	80009	070-1977-00

OPTIONAL ACCESSORIES

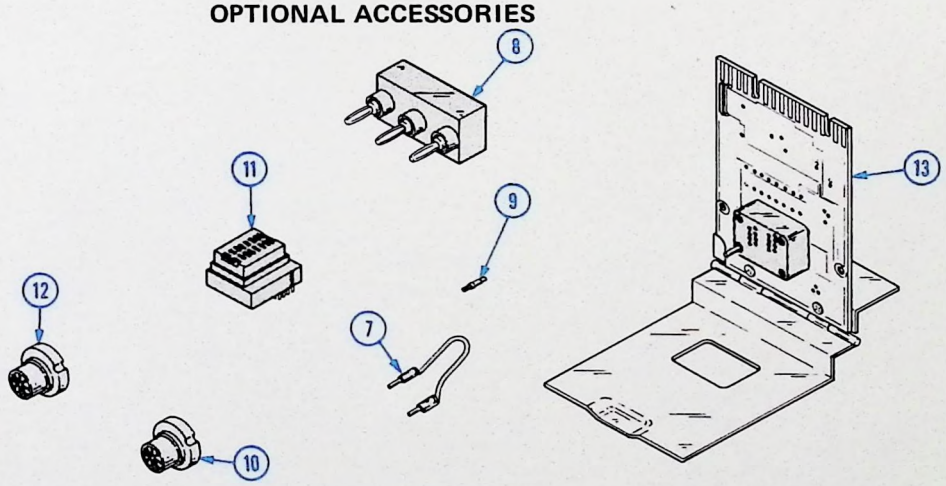

Fig. & Index No.	Tektronix Part No.	Serial/Model No. Eff	Dscont	Qty	1 2 3 4 5	Name & Description	Mfr Code	Mfr Part Number
7	012-0200-00			1		PATCH CORD:2 INCHES LONG	71279	3705-1-0312
8	013-0070-01			1		ADAPTER,TEST:3 TERMINAL,TRANSISTOR	80009	013-0070-01
9	131-1497-00			1		CONTACT,ELEC:	88245	15409
10	136-0441-00			1		SOCKET,SEMICOND:TRANSISTOR,10 LEAD	99779	639-70021-101
11	136-0443-00			1		SOCKET,SEMICOND:INTEGRATED CKT,14 LEAD	99779	629-70021-141
12	136-0444-00			1		SOCKET,SEMICOND:TRANSISTOR,10 LEAD	99779	639-70021-081
13	013-0150-00			1		CKT CARD ASSY:STANDARD OP AMP,W/COVER ONLY	80009	013-0150-00
	013-0147-00			1		RGLR,TEST UNIT:POSITIVE(NOT SHOWN)	80009	013-0147-00
	013-0148-00			1		RGLR,TEST UNIT:NEGATIVE(NOT SHOWN)	80009	013-0148-00

APPLICATIONS

Op Amp Gain Error

Certain applications of operational amplifiers require precise signal amplification. Where the circuit gain is determined by precision passive components of a feedback network, one source of error is limited open-loop gain of the op amp. If the op amp gain is considered to be a constant, the error due to limited op amp gain is approximately:

$$\% \text{ error} \cong 100 \frac{\text{Network Gain}}{\text{Op Amp Gain}'}$$

where the network gain is the gain determined by the feedback components and op amp gain is the open loop gain of the amplifier.

This commonly-used formula is convenient to use whenever op amp gain is constant (the gain curve is a well-behaved, linear function). However, as shown in the introduction to operational amplifiers, gain curves are not always linear. In these cases, another approach is used to determine error due to limited open-loop gain. One straight-forward approach was suggested in the first-time operation section, where the change in input voltage ΔV_{in}, is compared to the signal being amplified (V_S).

Using this approach, the input voltage change due to limited gain is read directly from the curve tracer. This error can be easily grouped with other error sources that are normally already expressed in this manner.

To read the appropriate ΔV_{in} from the curve tracer, it is necessary to know what output voltage change, ΔV_O, to consider. ΔV_O is obtained from the relationship:

$$\Delta V_O \cong V_S \times \text{Network Gain.}$$

Using the appropriate ΔV_O, the corresponding value of ΔV_{in} is determined directly from the display. It is important to select the proper source and load resistances to simulate the circuit environment in which the op amp will be used.

Most irregular gain-curve shapes can be traced to the thermal effects within the op amp IC chip. The heating is produced in the amplifier's output stage and becomes more pronounced as the op amp is required to supply greater load currents. If two gain curves of the same op amp are compared, one using 50 kΩ load resistance, and the other using a lower value, such as a 2 kΩ, the thermal nature of the irregular slope becomes apparent. The points of minimum op amp power dissipation (output voltages near supply voltage zero) change the least. The greatest difference between the two curves usually occurs at the maximum power dissipation points, half way between ground and each supply.

The time constant of these internal thermal effects is usually very short. When operating below the amplifier's first gain-vs-frequency break point, the thermal input voltage changes usually cannot be separated from changes due to limited gain. Therefore, the dc and low-frequency gain of an op amp is, in effect, the composite of both electronic and thermal actions. Using the change in DUT input voltage as a measure of gain-thermal performance, this source of error can be conviently accounted for.

Op Amp Gain at Higher Frequencies

As the frequency of signals applied to the op amp raises, thermal effects diminish and the effect of amplifier phase shift becomes predominant. Once well beyond the first gain-vs-frequency break point, gain falls at six dB per octave. In addition, the phase shift between input and output is near ninety degrees. The result on the curve tracer display is roughly an ellipse or a circle.

Input voltage is the maximum vertical excursion and output voltage is the maximum horizontal excursion. If the phase shift is ninety degrees, these maximum excursions should occur on the vertical and horizontal center lines of the graticule. The sweep amplitude should not be so high as to cause the DUT to reach its output limits during these measurements.

The Sweep Generator signal (up to 1 kHz) is an approximate sine wave. Higher frequency components are present, which cause larger irregularities in the displayed circles or ellipses. Therefore, gain measurements at higher frequencies are approximate.

Measurement Restrictions Due to Insufficient DUT Gain

When operating the 178 in the CMRR and PSRR functions, it is possible to have excessive measurement error whenever the op amp (DUT) has insufficient gain. This measurement error can be eliminated by selecting the External Feedback Amp circuit. The procedure that follows reveals whether the External Feedback Amp is needed.

The cause of measurement error due to low gain is found by considering the simplified diagram in Fig. I.

The Op Amp (DUT) is in a feedback loop in which the primary gain source is the DUT. In the CMRR and PSRR functions, the DUT output is held near zero volts by the action of the feedback loop. However, the output must move some small amount in order to supply the ΔV_{in} for the functional test being performed. The small movement of DUT output voltage, ΔV_o, is accompanied by

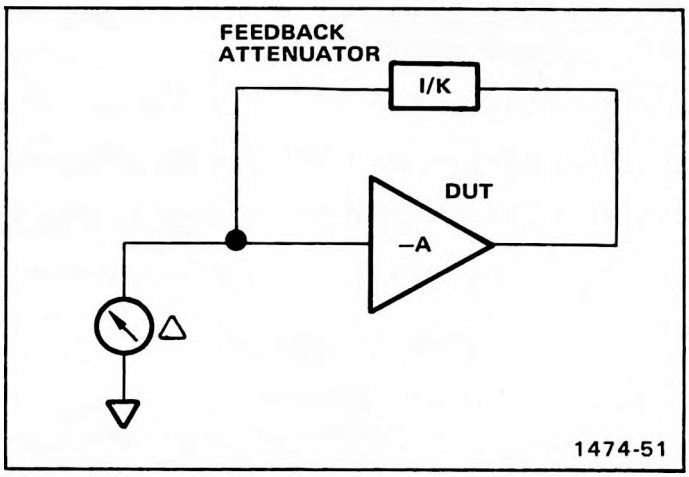

Fig. 1. Simplified diagram illustrating measurement error due to low voltage.

an input voltage change, producing some error in the ΔV_{in} being measured. The vertical deflection factor controls the feedback attenuator shown in Fig. 1, so that the DUT output must change from ten to one thousand times the required input voltage change. The error introduced by this process is:

$$\text{Error, } \Delta V_{in} = \frac{\Delta V_{in} \times K^1}{\text{DUT Gain} - K^1}$$

$$\text{and, \% error} = \frac{100 \times K^1}{\text{DUT Gain} - K^1}$$

[1]where K = 1000 for 10 μV to 50 μV/DIV

K = 100 for 100 μV to .5 mV/DIV

K = 10 for 1 mV to 50 mV/DIV

These results assume that small-signal (0.5 volts, p-p) DUT gain with a 50 kΩ load, is constant. This assumption is usually valid. Gain curve distortion is more pronounced with low value load resistance and large output signals. If the gain is not constant under this condition, the error in ΔV_{in} can be obtained from the gain curve by considering that portion of the curve around zero volts, where the DUT output voltage is $K^1 \times \Delta V_{in}$.

MANUAL CHANGE INFORMATION

At Tektronix, we continually strive to keep up with latest electronic developments by adding circuit and component improvements to our instruments as soon as they are developed and tested.

Sometimes, due to printing and shipping requirements, we can't get these changes immediately into printed manuals. Hence, your manual may contain new change information on following pages.

A single change may affect several sections. Since the change information sheets are carried in the manual until all changes are permanently entered, some duplication may occur. If no such change pages appear following this page, your manual is correct as printed.

SERVICE NOTE

Because of the universal parts procurement problem, some electrical parts in your instrument may be different from those described in the Replaceable Electrical Parts List. The parts used will in no way alter or compromise the performance or reliability of this instrument. They are installed when necessary to ensure prompt delivery to the customer. Order replacement parts from the Replaceable Electrical Parts List.

CALIBRATION TEST EQUIPMENT REPLACEMENT

Calibration Test Equipment Chart

This chart compares TM 500 product performance to that of older Tektronix equipment. Only those characteristics where significant specification differences occur, are listed. In some cases the new instrument may not be a total functional replacement. Additional support instrumentation may be needed or a change in calibration procedure may be necessary.

Comparison of Main Characteristics

DM 501 replaces 7D13		
PG 501 replaces 107	PG 501 - Risetime less than 3.5 ns into 50 Ω.	107 - Risetime less than 3.0 ns into 50 Ω.
108	PG 501 - 5 V output pulse; 3.5 ns Risetime.	108 - 10 V output pulse; 1 ns Risetime.
111	PG 501 - Risetime less than 3.5 ns; 8 ns Pretrigger pulse delay.	111 - Risetime 0.5 ns; 30 to 250 ns Pretrigger Pulse delay.
114	PG 501 - ±5 V output.	114 - ±10 V output. Short proof output.
115	PG 501 - Does not have Paired, Burst, Gated, or Delayed pulse mode; ±5 V dc Offset. Has ±5 V output.	115 - Paired, Burst, Gated, and Delayed pulse mode; ±10 V output. Short-proof output.
PG 502 replaces 107		
108	PG 502 - 5 V output	108 - 10 V output.
111	PG 502 - Risetime less than 1 ns; 10 ns Pretrigger pulse delay.	111 - Risetime 0.5 ns; 30 to 250 ns Pretrigger pulse delay.
114	PG 502 - ±5 V output	114 - ±10 V output. Short proof output.
115	PG 502 - Does not have Paired, Burst, Gated, Delayed & Undelayed pulse mode; Has ±5 V output.	115 - Paired, Burst, Gated, Delayed & Undelayed pulse mode; ±10 V output. Short-proof output.
2101	PG 502 - Does not have Paired or Delayed pulse. Has ±5 V output.	2101 - Paired and Delayed pulse; 10 V output.
PG 506 replaces 106	PG 506 - Positive-going trigger output signal at least 1 V; High Amplitude output, 60 V.	106 - Positive and Negative-going trigger output signal, 50 ns and 1 V; High Amplitude output, 100 V.
067-0502-01	PG 506 - Does not have chopped feature.	0502-01 - Comparator output can be alternately chopped to a reference voltage.
SG 503 replaces 190, 190A, 190B	SG 503 - Amplitude range 5 mV to 5.5 V p-p.	190B - Amplitude range 40 mV to 10 V p-p.
191	SG 503 - Frequency range 250 kHz to 250 MHz.	191 - Frequency range 350 kHz to 100 MHz.
067-0532-01	SG 503 - Frequency range 250 kHz to 250 MHz.	0532-01 - Frequency range 65 MHz to 500 MHz.
TG 501 replaces 180, 180A	TG 501 - Marker outputs, 5 sec to 1 ns. Sinewave available at 5, 2, and 1 ns. Trigger output - slaved to marker output from 5 sec through 100 ns. One time-mark can be generated at a time.	180A - Marker outputs, 5 sec to 1 μs. Sinewave available at 20, 10, and 2 ns. Trigger pulses 1, 10, 100 Hz; 1, 10, and 100 kHz. Multiple time-marks can be generated simultaneously.
181	TG 501 - Marker outputs, 5 sec to 1 ns. Sinewave available at 5, 2, and 1 ns.	181 - Marker outputs, 1, 10, 100, 1000, and 10,000 μs, plus 10 ns sinewave.
184	TG 501 - Marker outputs, 5 sec to 1 ns. Sinewave available at 5, 2, and 1 ns. Trigger output - slaved to marker output from 5 sec through 100 ns. One time-mark can be generated at a time.	184 - Marker outputs, 5 sec to 2 ns. Sinewave available at 50, 20, 10, 5, and 2 ns. Separate trigger pulses of 1 and .1 sec; 10, 1, and .1 ms; 10 and 1 μs. Marker amplifier provides positive or negative time marks of 25 V min. Marker intervals of 1 and .1 sec; 10, 1, and .1 ms; 10 and 1 μs.
2901	TG 501 - Marker outputs, 5 sec to 1 ns. Sinewave available at 5, 2, and 1 ns. Trigger output - slaved to marker output from 5 sec through 100 ns. One time-mark can be generated at a time.	2901 - Marker outputs, 5 sec to 0.1 μs. Sinewave available to 50, 10, and 5 ns. Separate trigger pulses, from 5 sec to 0.1 μs. Multiple time-marks can be generated simultaneously.

NOTE: All TM 500 generator outputs are short-proof. All TM 500 plug-in instruments require TM 500-Series Power Module.